USER MANUAL (IFU)

OAKWORKS®

Imaging and Pain Management Tables

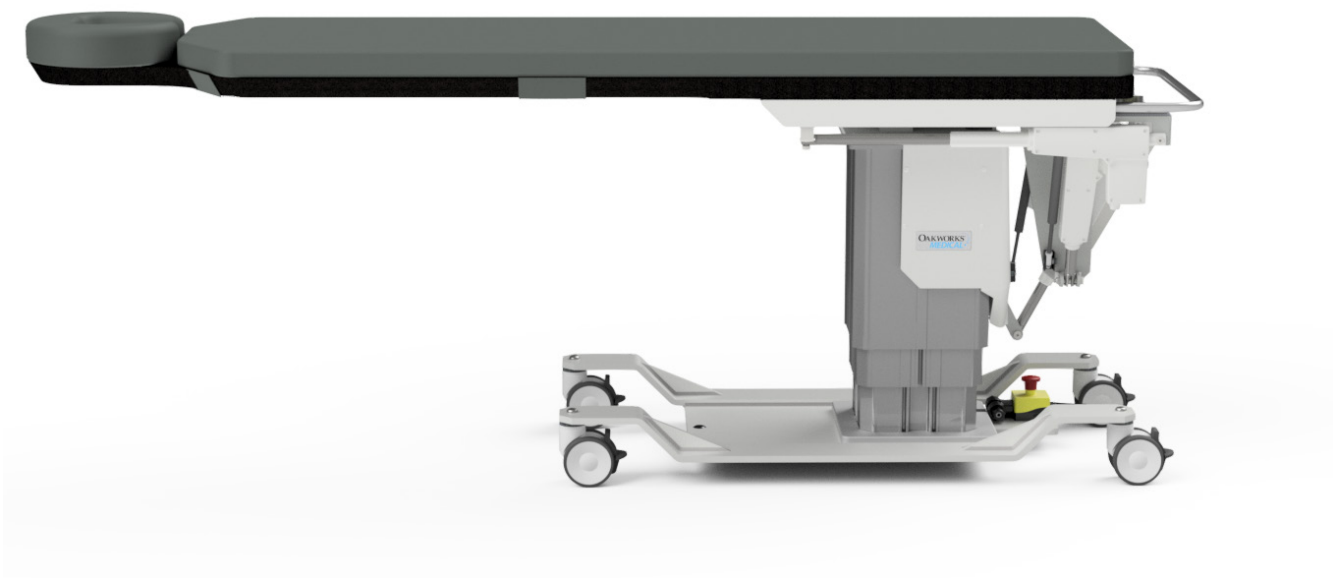

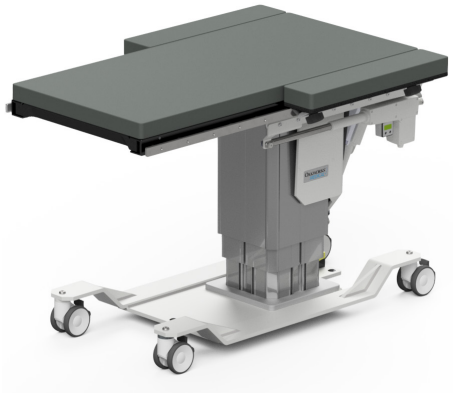

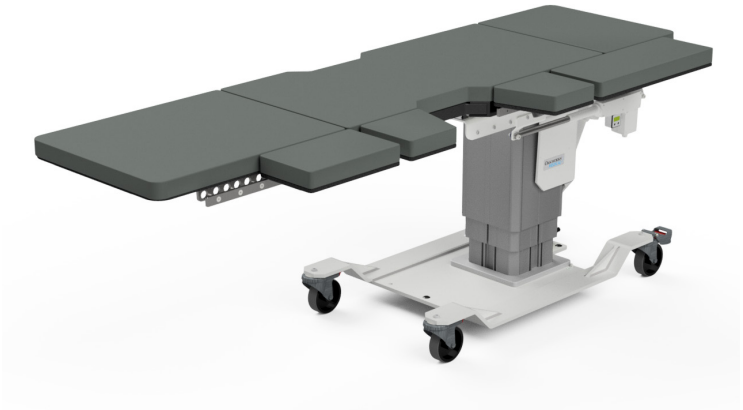

www.oakworksmed.com · 717.235.6807

made in the USA
with US & imported parts

OakWorks® MEDICAL PRODUCTS

© Copyright 2026
OAKWORKS® , Inc.

Notice

The information contained within this document is subject to change without notice and should not be construed as a commitment by OAKWORKS®, Inc.

OAKWORKS®, Inc. encourages requests for technical specifications and the like documentation to ensure accuracy. The appropriate documentation is available upon request.

OAKWORKS®, Inc. shall not be liable for incidental or consequential damages in connection with or arising out of the furnishing, performance, or use of this document and the program material which it describes.

Printed in U.S.A.

All rights are reserved. No part of this document may be photocopied, reproduced or translated to another language without prior written consent of OAKWORKS®, Inc.

OAKWORKS® is a registered trademark of OAKWORKS®, Inc.

TABLE OF CONTENTS

Product Use Description 1
Important Safety Instructions
- Symbol Identification 1
- Contraindications 1
- Safety Instructions 2-3

Product Description & Controls Operation
- CFPM100 4
- CFPM200 5-6
- CFPM300 7-8
- CFPM400 9-10
- CFPM201 11-12
- CFPM301 13-14
- CFPM302 15-16
- CFPMB301 - Bariatric 17-18
- CFPM401 19-20
- CFLU401 - Lithotripsy 21-22
- CFUR301 - Urology 23-24
- CFUR401 - Urology 25-26

Installation
- Grounding 27

Directions for Use
- Bubble Level 28
- Angle Indicator 28
- Patient Restraint Strap 28
- Remove / Replace the Table Top Pad 29
- Adjusting Crescent Face Pads (Integrated Headrest tops only) 29
- Locking Casters Use 30
- Emergency Stop 30
- Weight Capacity & Patient Use 31
- Urology Table Bag Hoop 31
- Lithotripsy/Urology & Urology Table Lateral Extensions 32
- Lithotripsy/Urology & Urology Table End Extensions 33
- Lithotripsy Table used as Urology Table 33
- Carbon Fiber Arm Board 34
- Adjustable T-Rail Clamp 34
- Spine Positioning System II 35
- Fluoro Extender 35

Reference - Usable Imaging Area Diagrams
- CFPM 100 - Integrated Headrest & Rectangular Tops 36-37
- CFPM200 Through CFPM401 - Integrated Headrest Top 38
- CFPM200 Through CFPM401 - Rectangular Top 39
- CFUR301 & CFUR401 - Urology Top 40
- CFLU401 - Lithotripsy / Urology Top 41

Cleaning & Disinfection / Inspections / Warranty
- Recommended Disinfectants / Cleaners 42
- Cleaning Process 42
- Inspections & Maintenance 43
- Warranty Information 43

Unique Device Identification (UDI) Information 44

Specifications
- Product Specifications 45
- Environmental Conditions 45
- Electrical Specifications 45
- Guidance and manufacturer's declaration - Electromagnetic emissions 46
- Recommended separation distances 46
- Significant Zones of Occupancy 47-50
- Product Disposal 50

Contact Information ..... back cover

PRODUCT USE DESCRIPTION

OAKWORKS® Imaging and Pain Management Tables are radiographic tables intended for use with mobile or compact stationary C-arm Imaging Systems. It is ideally suited for pain management imaging and therapeutic procedures. These tables are suitable to use for diagnostic x-ray imaging and imaging during therapeutic procedures such as spinal injections, vertebroplasty procedures and other pain management procedures. The CFLU and CFUR Tables are designed for Lithotripsy and Urology procedures. It is intended to be operated by a healthcare professional in a medical environment. No special training is required but a review of the following Safety Instructions is important for the safety of the operator and patient. The healthcare professional should read and understand this entire manual before use with a patient.

NOTE The EMISSIONS characteristics of this equipment make it suitable for use in industrial areas and hospitals (CISPR 11 class A). If it is used in a residential environment (for which CISPR 11 class B is normally required) this equipment might not offer adequate protection to radio-frequency communication services. The user might need to take mitigation measures, such as relocating or re-orienting the equipment.

SYMBOL IDENTIFICATION

This symbol, when used in this manual and on product labels, represents a caution warning. Be sure to read and comply with all precautions and warnings.

This symbol, when used in this manual and on product labels, warns against an electrical shock hazard. Be sure to observe and comply with all warnings.

This symbol, when used in this manual and on product labels, indicates the potential of exposure to harmful x-rays. Be sure to read and comply with all warnings.

This symbol, when used in this manual and on product labels, indicates that the table and components are a Type B Applied Part pursuant to IEC 60601-1.

This symbol, when used in this manual or on product labels, indicates a Protective Earth (Ground) Terminal.

This symbol, when used in this manual and on product labels, indicates the name and address of the manufacturer.

This symbol, when used in this manual or on product labels, indicates the country of manufacture along with date of manufacture of the device next to it.

This symbol, when used in this manual or on product labels, indicates alternating current (AC).

This symbol, when used in this manual or on product labels, indicates direct current (DC).

This symbol is used to indicate that the operator should consult the user manual.

Sitting is prohibited in this area.

CONTRAINDICATIONS

The Oakworks Imaging and Pain Management Tables should not be used with Imaging systems having intensifier screens or film cassettes larger than 12 inches (30 cm) when an oblique angle of view is being used. The tables are not designed for and should not be used with Magnetic Resonance Imaging procedures.

IMPORTANT SAFETY INSTRUCTIONS

CAUTION **READ AND SAVE THESE INSTRUCTIONS**

After unpacking your table, inspect it thoroughly for damage. If you suspect a problem do not use the table and call our customer service department at 717.235.6807.

Improper use of this device can cause injury. Be sure to read all operating instructions prior to use.

Weight limit (patient and accessories): 227 kg / 500 lbs. distributed evenly. (Bariatric Table only: 340 kg / 750 lbs.)

Do not sit beyond warning line on carbon fiber top. On Lithotripsy / Urology Top - Do not sit on any extensions (Weight Limit: 200 lbs. / 91 kg.)

The table utilizes four locking casters to permit movement of the table within the imaging suite. Accidental movement of the table may occur. Lock casters prior to imaging of the patient. Lock casters when the patient is mounting & dismounting the table.

The table should not be used adjacent to or stacked with other equipment. If adjacent or stacked use is necessary, the table should be observed to verify normal operation in the configuration in which it will be used.

The use of accessories, transducers, and cables other than those specified (with the exception of transducers and cables sold by the Manufacturer of this device as replacement parts for internal components) may result in increased emissions or decreased Immunity of the table.

The table is designed to be a standalone table used with radiographic equipment. This table must not be modified or incorporated into any other equipment.

There may be pinch points under the table top. Do not have any body part under the top when the table is in motion.

Be certain that the table is completely lowered prior to discharging an ambulatory patient. The patient may lose balance and fall.

Patient must be secured with Safety Restraint Strap prior to using the tables.

Medical Electrical Equipment needs special precautions regarding EMC and needs to be installed and put into service according to the EMC information provided in the specifications at the end of this manual.

Portable and Mobile RF Communications Equipment can affect Medical Electrical Equipment.

This table is not suitable for use in the presence of flammable anesthetic mixture with air or oxygen or nitrous oxide.

Electrical Shock Hazard. The power supply/control module is located inside the lifting column and under the top. No user serviceable parts are inside. Refer servicing to qualified personnel. Unplug wall connector prior to contact with any cables connected to the power supply.

To avoid the risk of electric shock, this equipment must only be connected to an outlet that is properly grounded. See GROUNDING instructions in this manual.

Grounding reliability can only be achieved when this equipment is connected to an equivalent 3 prong receptacle marked “Hospital Only” or “Hospital Grade”.

Oakworks medical tables are designed and built to provide many years of dependable service. Please follow local regulations and laws when disposing of the electrical components used in this table.

Do not apply excessive force to the hand/foot control as it may damage the control.

Do not use the hand/foot control if signs of wear or damage are visible as this can cause unintentional motion.

Store the hand control when not in use on the Hand Rail attached to the back of the tabletop.

IMPORTANT SAFETY INSTRUCTIONS

CAUTION

The intended use for the Rectangular and Integrated headrest top products do not require drapes. The use of sterile drapes are recommended for the Litho/Urology products for certain procedures and when the use of the Urology Bag Hoop is required.

Abnormal table functions will be visible by the operator such as two functions/movements operating at the same time. This is an indication the table is not operating properly due to a fault (short/open) in the control components.

Oakworks accessories should only be used with Oakworks products. The use of non-Oakworks accessories such as armboards and pads could expose the patient to excess radiation exposure.

WARNING

To reduce the risk of burns, fire, electric shock or injury to persons:

1. Unplug this furnishing from the electrical outlet before cleaning.
2. Unplug from outlet before adding or removing parts.
3. Never operate this furnishing if it has a damaged cord or plug, if it is not working properly, if it has been dropped or damaged, or dropped into water. Contact Oakworks Customer Service before use.
4. Keep the cord away from heated surfaces.
5. Never drop or insert any object into any opening.
6. Do not use outdoors.
7. Do not operate where aerosol (spray) products are being used or where oxygen is being administered.

DANGER

The potential of exposure to harmful x-rays exists when this table is in use. The use of adequate x-ray barrier devices is necessary to provide protection to both the operator and the patient. X-ray barrier devices are recommended for the patient outside of the intended target area to prevent exposure to scattered radiation from the x-ray generating source.

The tabletop has a typical aluminum filtration equivalence of 1.10 mm as measured at 100 kVp and a half value (HVL) of 3.6 mm. (NOTE: Bariatric Top has a typical aluminum filtration equivalence of 1.50 mm. as measured at 100 kVp and a half value (HVL) of 3.6 mm.)

- Oakworks Imaging and Pain Management Tables may be used for x-ray imaging where the x-ray generator is located below the tabletop and the image receptor is located above the tabletop. This is the recommended method. The tables may also be used for x-ray imaging where the x-ray generator is located above the tabletop and the image receptor is located below the tabletop. This application will result in greater patient exposure to x-rays. The operator must weigh this issue with the imaging requirements and patient exposure issues.
- The Imaging and Pain Management Tables may be used with the x-ray generator above the tabletop and a film cassette located on the tabletop. (See contraindications regarding film cassette size.)
- The x-ray generator should never be located above the tabletop when the OAKWORKS® Imaging and Pain Management Table and the OAKWORKS® Spine Positioning System/Prone Pillow are used together. This type of use requires that the x-ray generator is located below the tabletop and the imaging intensifier or film cassette located above the tabletop.
- Do not use the controls inside the SIGNIFICANT ZONE OF OCCUPANCY.

WARNING

This medical device is MR Unsafe and should remain outside the MRI scanner room.

CFPM100

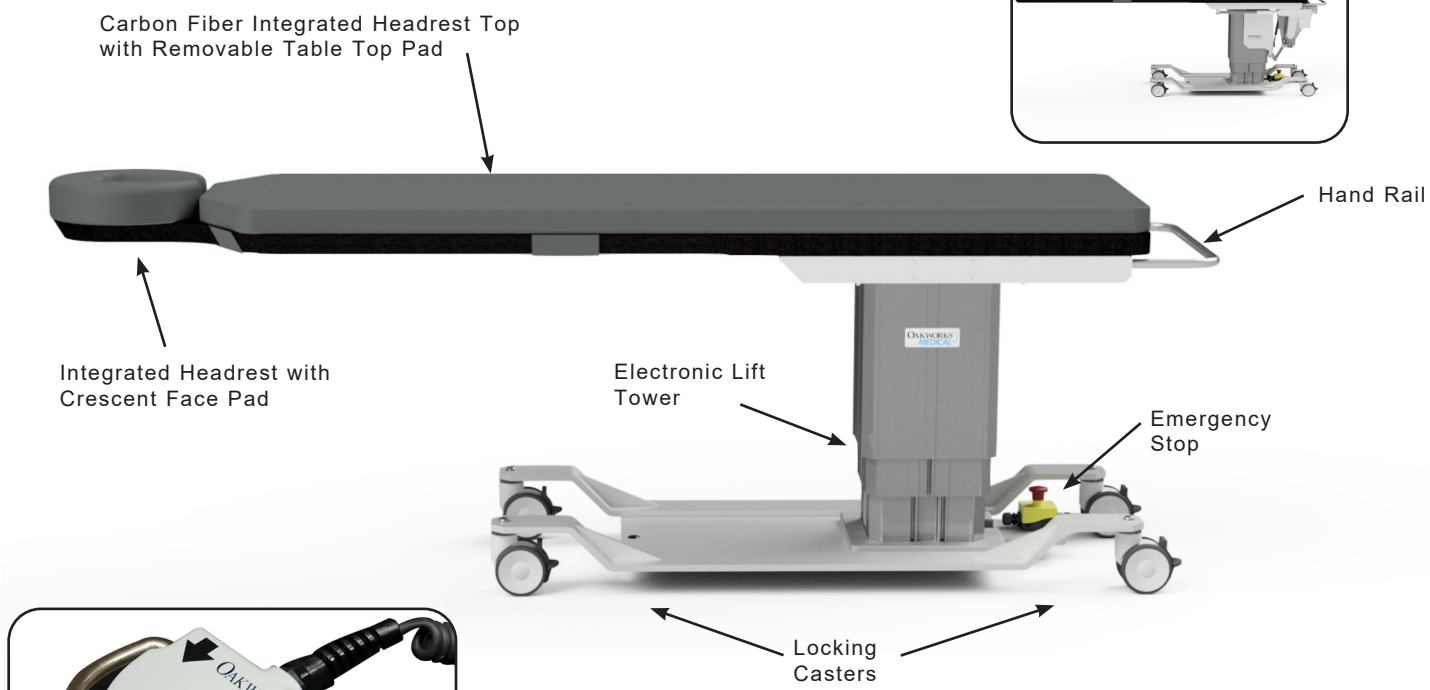

CFPM 100 Foot Control

CAUTION

Do not apply excessive force to the foot control as it may damage the control. Do not use the foot control if signs of wear or damage are visible as this can cause unintentional motion.

STANDARD SPECIFICATIONS	
Height Motion w/o pad	Powered 22”-40” (56-102cm)
Foot Control	Height motion
Choice of Tabletop: - Integrated Headrest - Rectangular	 22” (56cm) W x 84” (214cm) L 24” (61cm) W x 80” (203cm) L
Table Voltage Options	120V/60Hz or 230V/50Hz
Table Capacity	500 lbs. (227 kg) distributed evenly
4” (10 cm.) Locking Casters	Locking / Unlocking Casters for mobile or permanent positioning
Padding	2” (5cm) Comfort Foam™
Crescent Face Pad	Integrated Headrest Only
Patient Restraint Strap	Must be used during all procedures
Table Weight	343 lbs. (156 kg)

OPTIONS
5” (13cm) Locking Casters
International Electric Configurations
1” (2.5cm) Tabletop Pad
ACCESSORIES
Carbon Fiber Arm Board
Spine Positioning System II
Adjustable T-rail Clamp
Fluoro Extender

For electrical specs, see Specifications section.

CFPM200

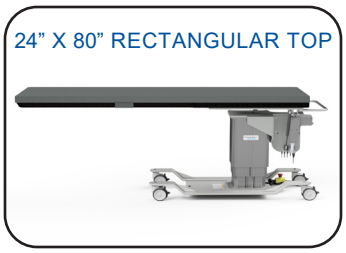

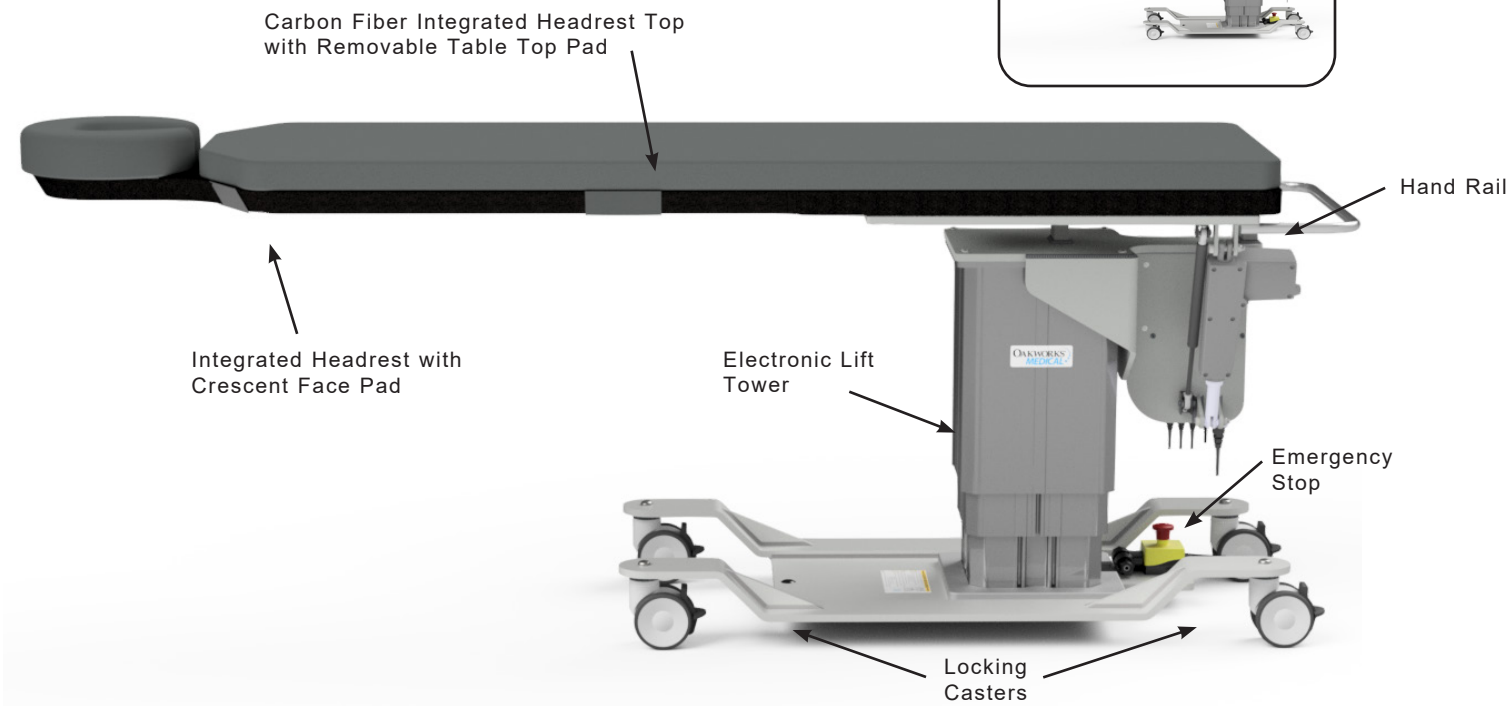

STANDARD SPECIFICATIONS	
Motion 1 w/o pad	Powered 25”-43” (64-109cm) Height Range
Motion 2	Powered ±15° Lateral Tilt
Hand Control	All powered motions
Choice of Tabletop: - Integrated Headrest - Rectangular	 22” (56cm) W x 84” (214cm) L 24” (61cm) W x 80” (203cm) L
Table Voltage Options	120V/60Hz or 230V/50Hz
Table Capacity	500 lbs. (227 kg) distributed evenly
4” (10 cm.) Locking Casters	Locking / Unlocking Casters for mobile or permanent positioning
Padding	2” (5cm) Comfort Foam™
Crescent Face Pad	Integrated Headrest Only
Patient Restraint Strap	Must be used during all procedures
Table Weight	405 lbs. (184 kg)

OPTIONS
5” (13cm) Locking Casters
International Electric Configurations
Foot Control
1” (2.5cm.) Tabletop Pad
ACCESSORIES
Carbon Fiber Arm Board
Spine Positioning System II
Adjustable T-rail Clamp
Fluoro Extender

For electrical specs, see Specifications section.

CONTROL OPERATIONS - CFPM 200

CAUTION

Do not apply excessive force to the foot control as it may damage the control.

Do not use the hand or foot control if signs of wear or damage are visible as this can cause unintentional motion.

The CFPM 200 offers Vertical Height and Lateral Tilt positioning with electronic ease. Operate the hand control and optional foot control as shown below to control these functions of the table. Test each of the table's functions prior to use with a patient. Store the hand control when not in use on the Hand Rail attached to the back of the tabletop.

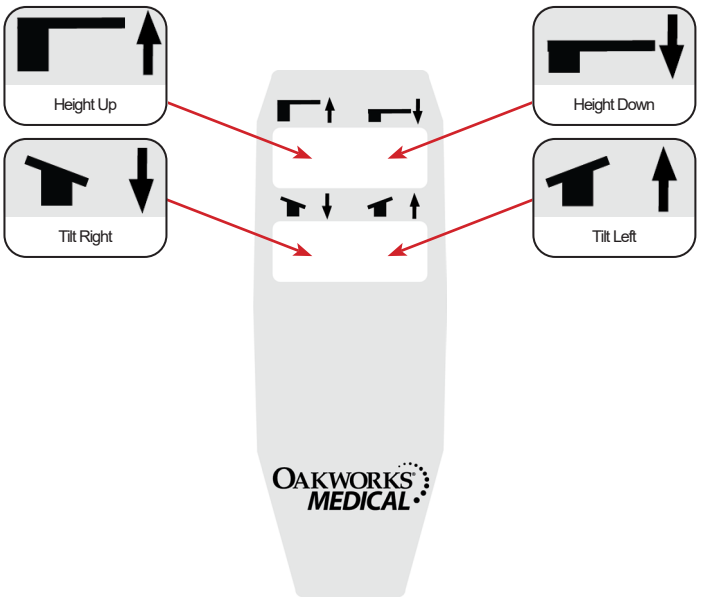

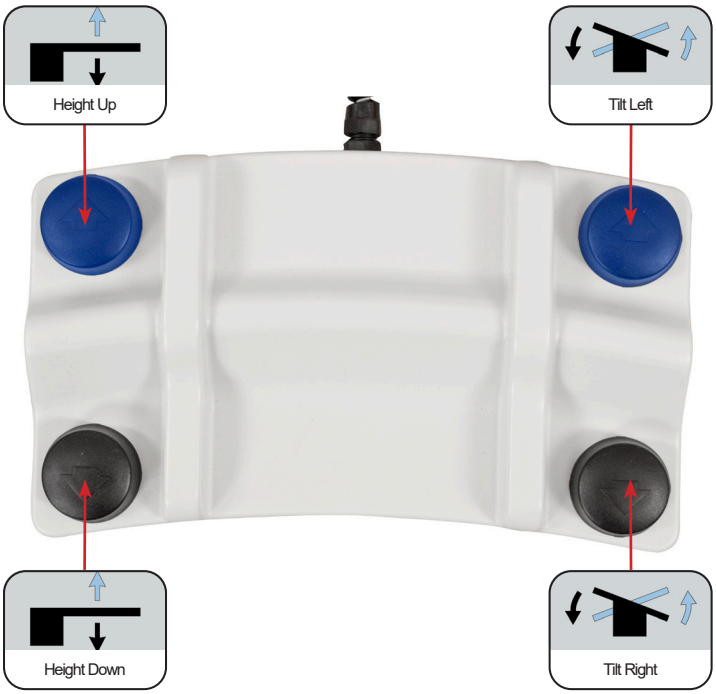

CAUTION

The Foot Control Riser Plate prevents the foot control from getting caught underneath the base of the table or between the column and the base as the column descends. This reduces the risk of unintentional movement of the table due to accidental activation of the foot control buttons.

CFPM300

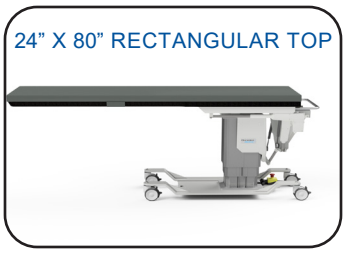

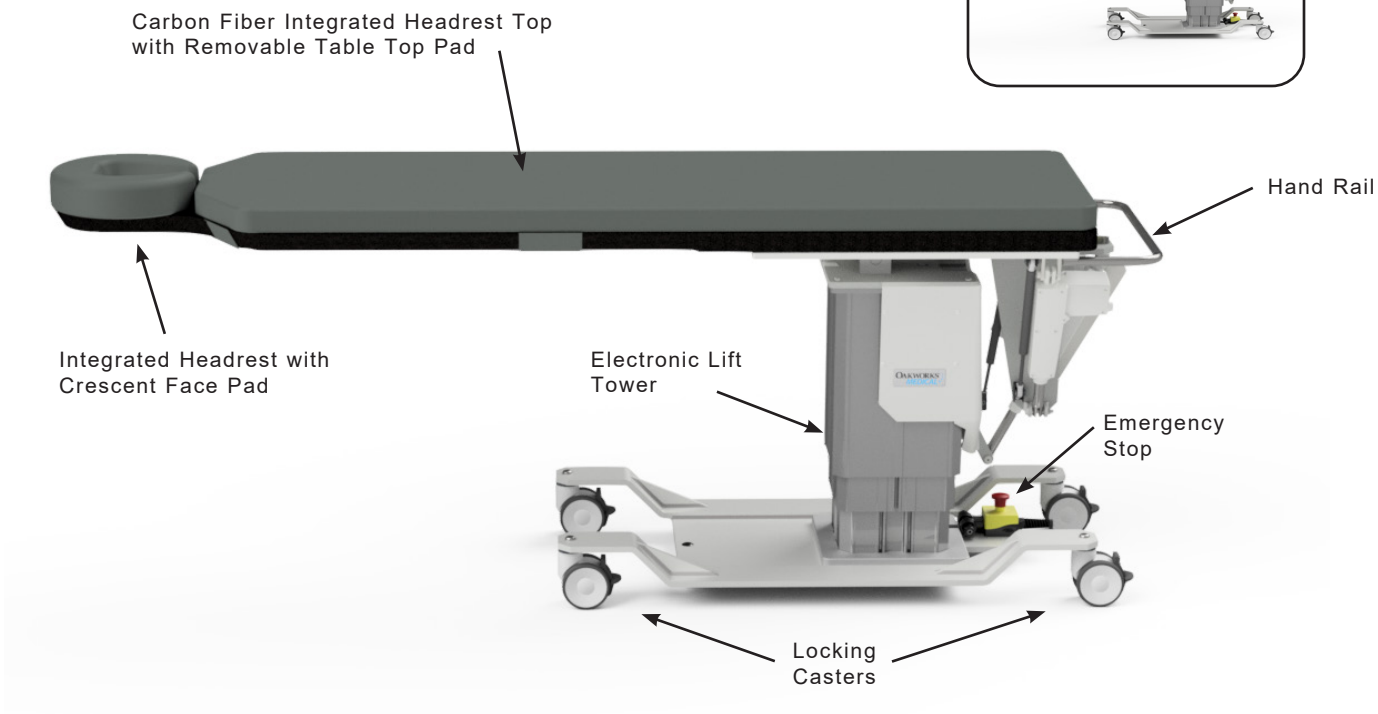

STANDARD SPECIFICATIONS	
Motion 1 w/o pad	Powered 26”-43” (66-109cm) Height Range
Motion 2	Powered 15° Trendelenburg Tilt Powered 11° Reverse Trendelenburg Tilt
Motion 3	Powered ±15° Lateral Tilt
Hand Control	All powered motions
Choice of Tabletop: - Integrated Headrest - Rectangular	 22” (56cm) W x 84” (214cm) L 24” (61cm) W x 80” (203cm) L
Table Voltage Options	120V/60Hz or 230V/50Hz
Table Capacity	500 lbs. (227 kg) distributed evenly
4” (10 cm.) Locking Casters	Locking / Unlocking Casters for mobile or permanent positioning
Padding	2” (5cm) Comfort Foam™
Crescent Face Pad	Integrated Headrest Only
Patient Restraint Strap	Must be used during all procedures
Table Weight	498 lbs. (226kg)

OPTIONS
5” (13cm) Locking Casters
International Electric Configurations
Foot Control
1” (2.5cm.) Tabletop Pad
ACCESSORIES
Carbon Fiber Arm Board
Spine Positioning System II
Adjustable T-rail Clamp
Fluoro Extender

CONTROL OPERATIONS - CFPM 300

CAUTION

Do not apply excessive force to the foot control as it may damage the control.

Do not use the hand or foot control if signs of wear or damage are visible as this can cause unintentional motion.

The CFPM 300 offers Vertical Height, Trendelenburg Tilt, and Lateral Tilt positioning with electronic ease. Operate the hand control and optional foot control as shown below to control these functions of the table. Test each of the table's functions prior to use with a patient. Store the hand control when not in use on the Hand Rail attached to the back of the tabletop.

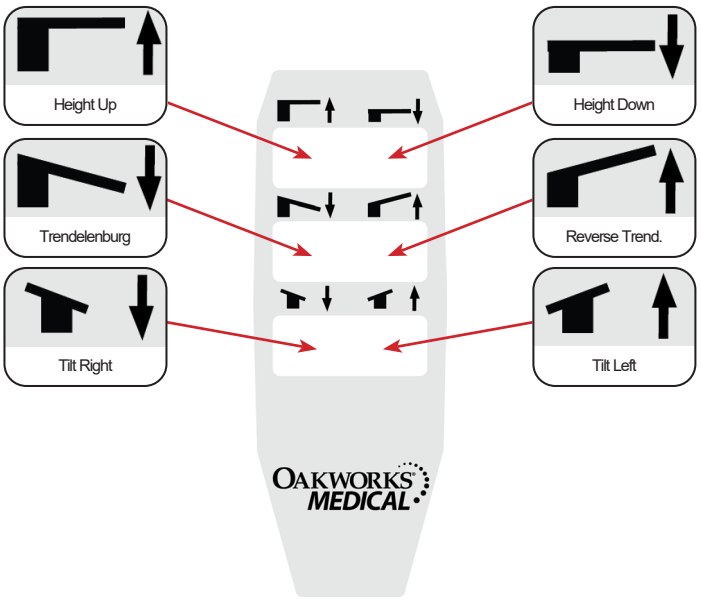

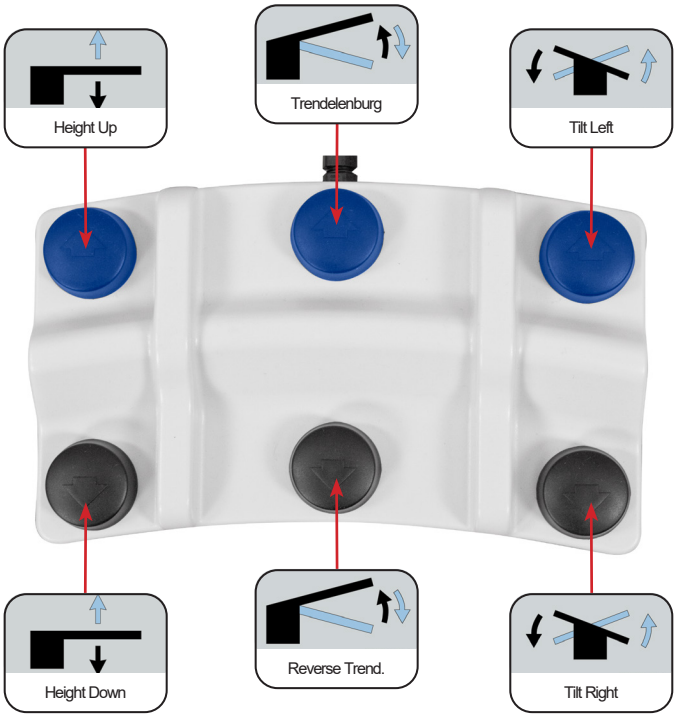

CAUTION

The Foot Control Riser Plate prevents the foot control from getting caught underneath the base of the table or between the column and the base as the column descends. This reduces the risk of unintentional movement of the table due to accidental activation of the foot control buttons.

CFPM400

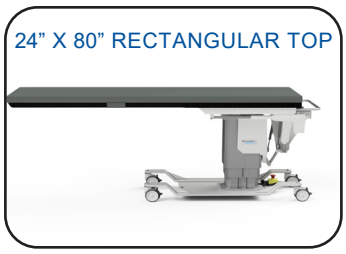

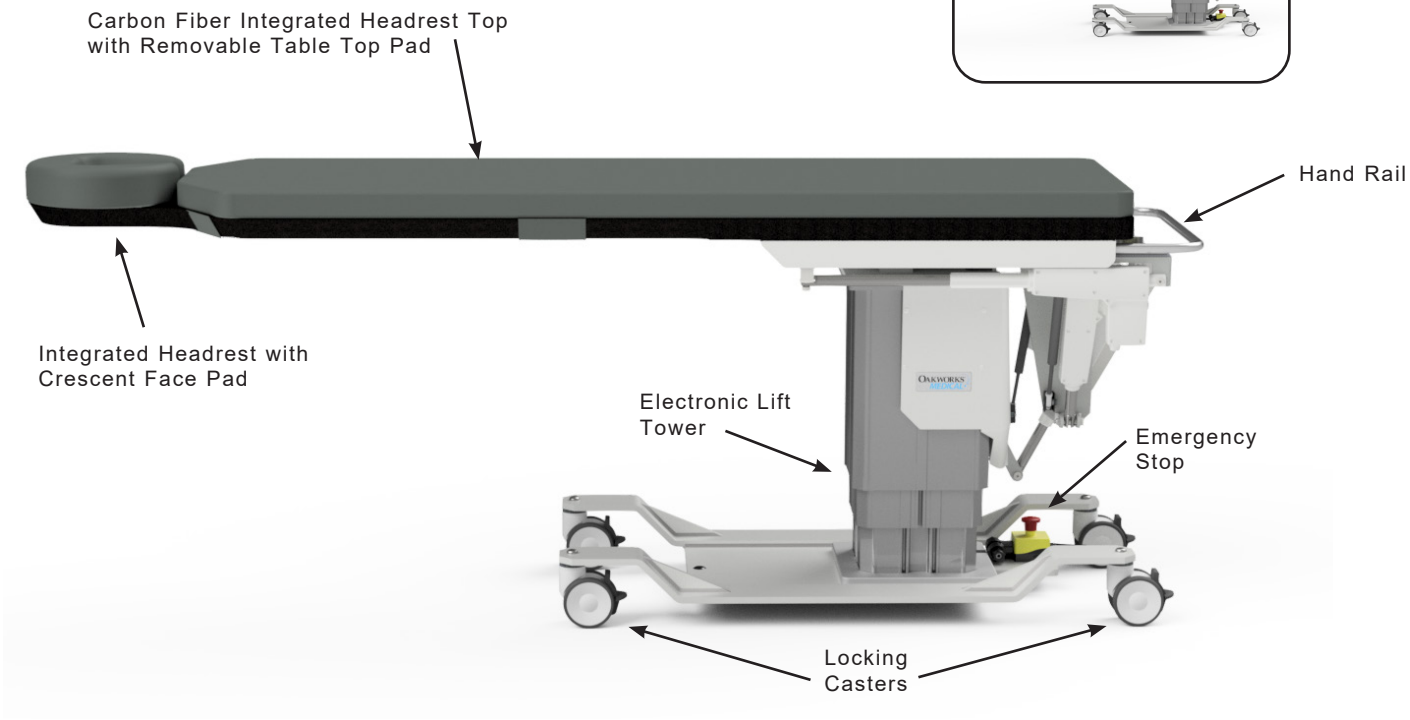

STANDARD SPECIFICATIONS	
Motion 1 w/o pad	Powered 26”-43” (66-109cm) Height Range
Motion 2	Powered 15° Trendelenburg Tilt Powered 11° Reverse Trendelenburg Tilt
Motion 3	Powered ±15° Lateral Tilt
Motion 4	Powered 10” (25cm) Longitudinal Travel
Hand Control	All powered motions
Choice of Tabletop: - Integrated Headrest - Rectangular	 22” (56cm) W x 84” (214cm) L 24” (61cm) W x 80” (203cm) L
Table Voltage Options	120V/60Hz or 230V/50Hz
Table Capacity	500 lbs. (227 kg) distributed evenly
4” (10 cm.) Locking Casters	Locking / Unlocking Casters for mobile or permanent positioning
Padding	2” (5cm) Comfort Foam™
Crescent Face Pad	Integrated Headrest Only
Patient Restraint Strap	Must be used during all procedures
Table Weight	498 lbs. (226 kg)

OPTIONS
5” (13cm) Locking Casters
International Electric Configurations
Foot Control
1” (2.5cm) Tabletop Pad
ACCESSORIES
Carbon Fiber Arm Board
Spine Positioning System II
Adjustable T-rail Clamp
Fluoro Extender

For electrical specs, see Specifications section.

CONTROL OPERATIONS - CFPM 400

CAUTION

Do not apply excessive force to the foot control as it may damage the control.

Do not use the hand or foot control if signs of wear or damage are visible as this can cause unintentional motion.

The CFPM 400 offers Vertical Height, Trendelenburg Tilt, Lateral Tilt, and Longitudinal Travel positioning with electronic ease. Operate the hand control and optional foot control as shown below to control these functions of the table. Test each of the table's functions prior to use with a patient. Store the hand control when not in use on the Hand Rail attached to the back of the tabletop.

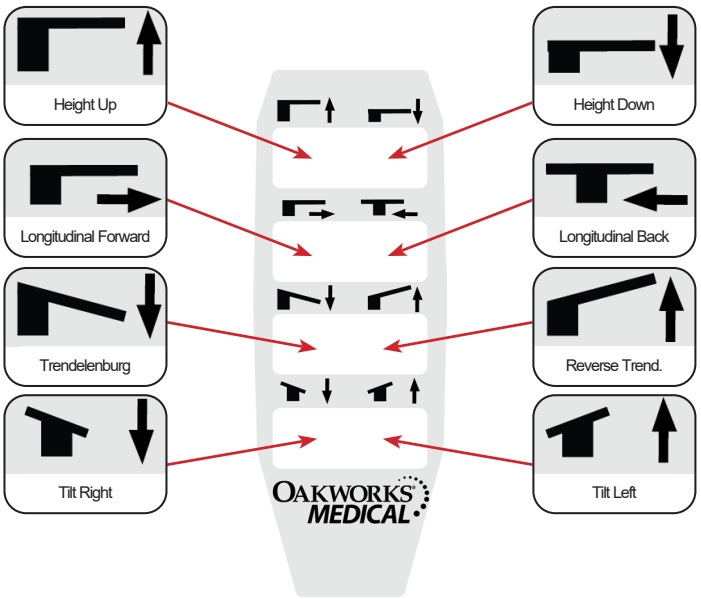

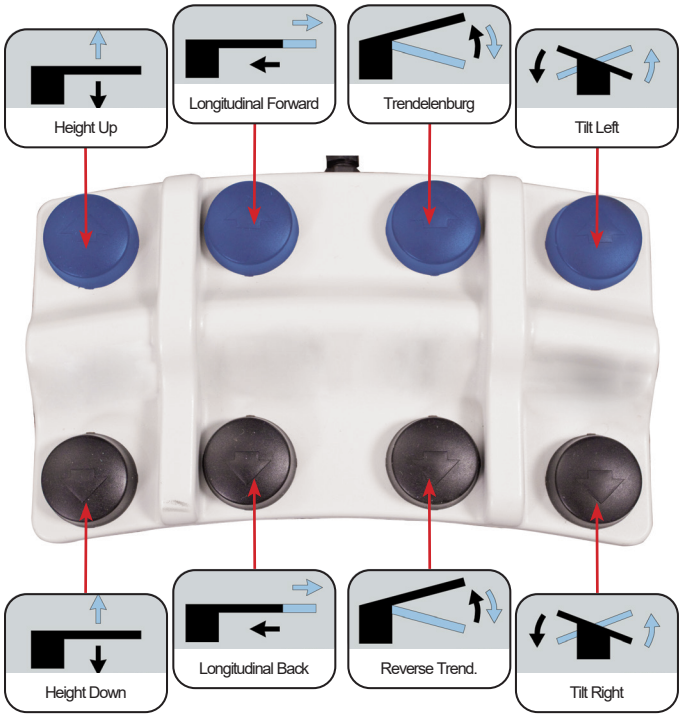

CAUTION

The Foot Control Riser Plate prevents the foot control from getting caught underneath the base of the table or between the column and the base as the column descends. This reduces the risk of unintentional movement of the table due to accidental activation of the foot control buttons.

CFPM201

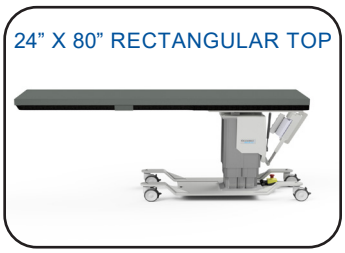

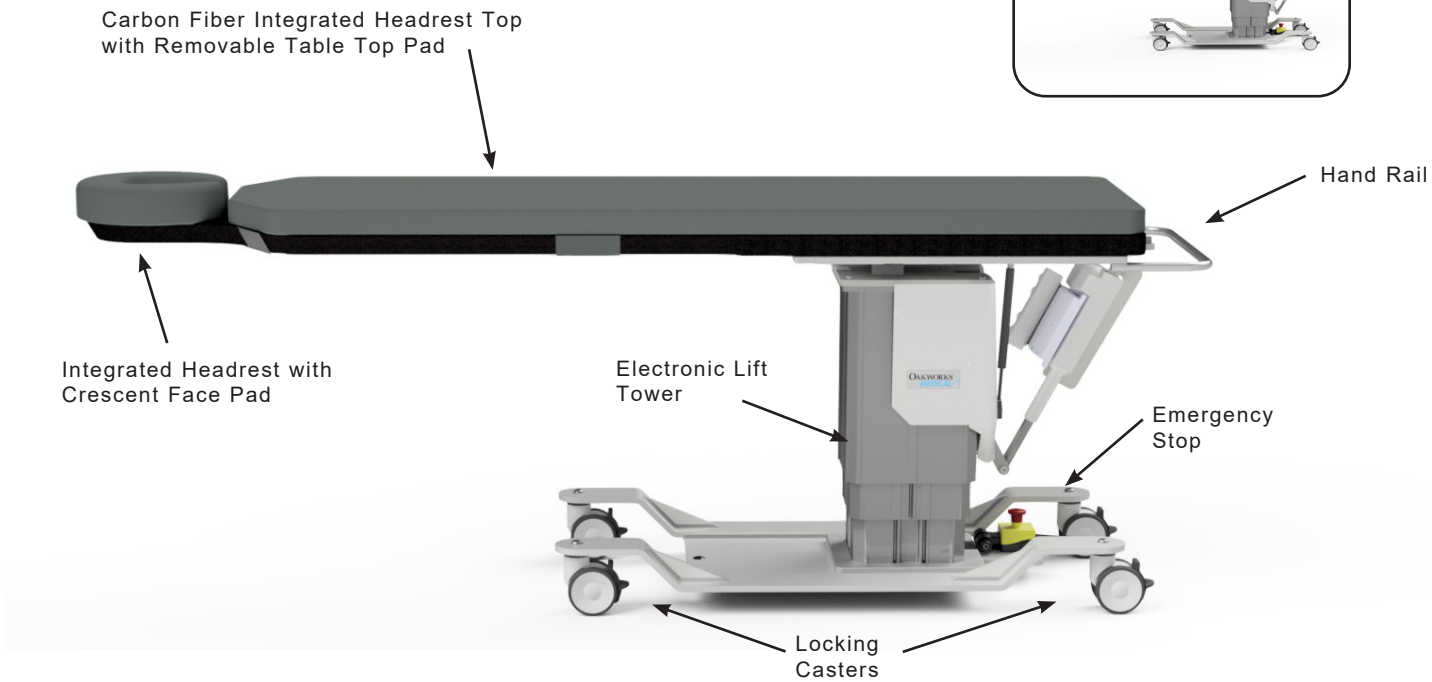

STANDARD SPECIFICATIONS	
Motion 1 w/o pad	Powered 25”-42” (64-107cm) Height Range
Motion 2	Powered 15° Trendelenburg Tilt Powered 11° Reverse Trendelenburg Tilt
Hand Control	All powered motions
Choice of Tabletop: - Integrated Headrest - Rectangular	 22” (56cm) W x 84” (214cm) L 24” (61cm) W x 80” (203cm) L
Table Voltage Options	120V/60Hz or 230V/50Hz
Table Capacity	500 lbs. (227 kg) distributed evenly
4” (10 cm.) Locking Casters	Locking / Unlocking Casters for mobile or permanent positioning
Padding	2” (5cm) Comfort Foam™
Crescent Face Pad	Integrated Headrest Only
Patient Restraint Strap	Must be used during all procedures
Table Weight	417 lbs. (189 kg)

OPTIONS
5” (13cm) Locking Casters
International Electric Configurations
Foot Control
1” (2.5cm) Tabletop Pad
ACCESSORIES
Carbon Fiber Arm Board
Spine Positioning System II
Adjustable T-rail Clamp
Fluoro Extender

For electrical specs, see Specifications section.

CONTROL OPERATIONS - CFPM 201

CAUTION

Do not apply excessive force to the foot control as it may damage the control.

Do not use the hand or foot control if signs of wear or damage are visible as this can cause unintentional motion.

The CFPM 201 offers Vertical Height and Trendelenburg Tilt positioning with electronic ease. Operate the hand control and optional foot control as shown below to control these functions of the table. Test each of the table's functions prior to use with a patient. Store the hand control when not in use on the Hand Rail attached to the back of the tabletop.

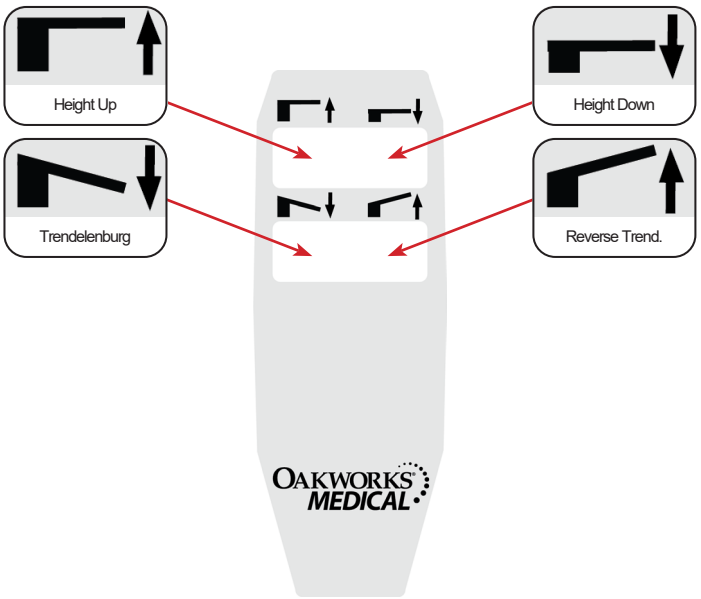

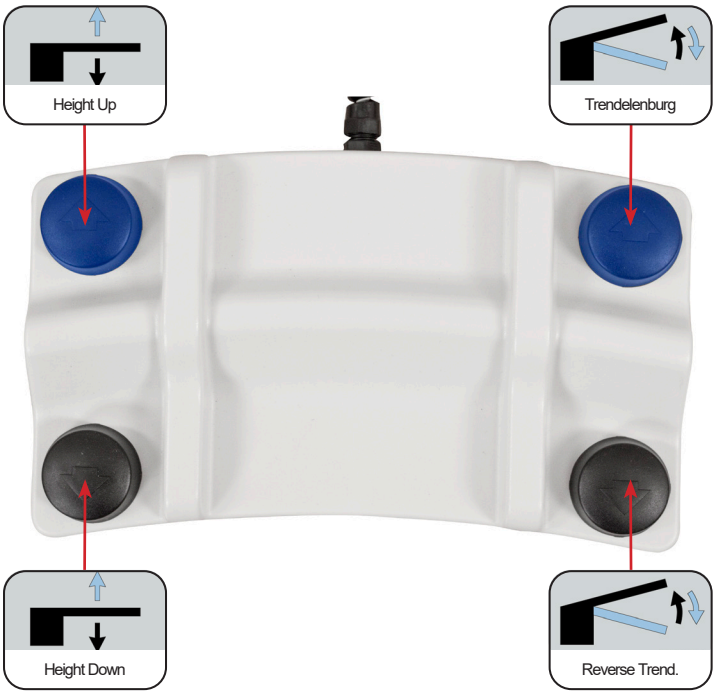

CAUTION

The Foot Control Riser Plate prevents the foot control from getting caught underneath the base of the table or between the column and the base as the column descends. This reduces the risk of unintentional movement of the table due to accidental activation of the foot control buttons.

CFPM301

24” X 80” RECTANGULAR TOP

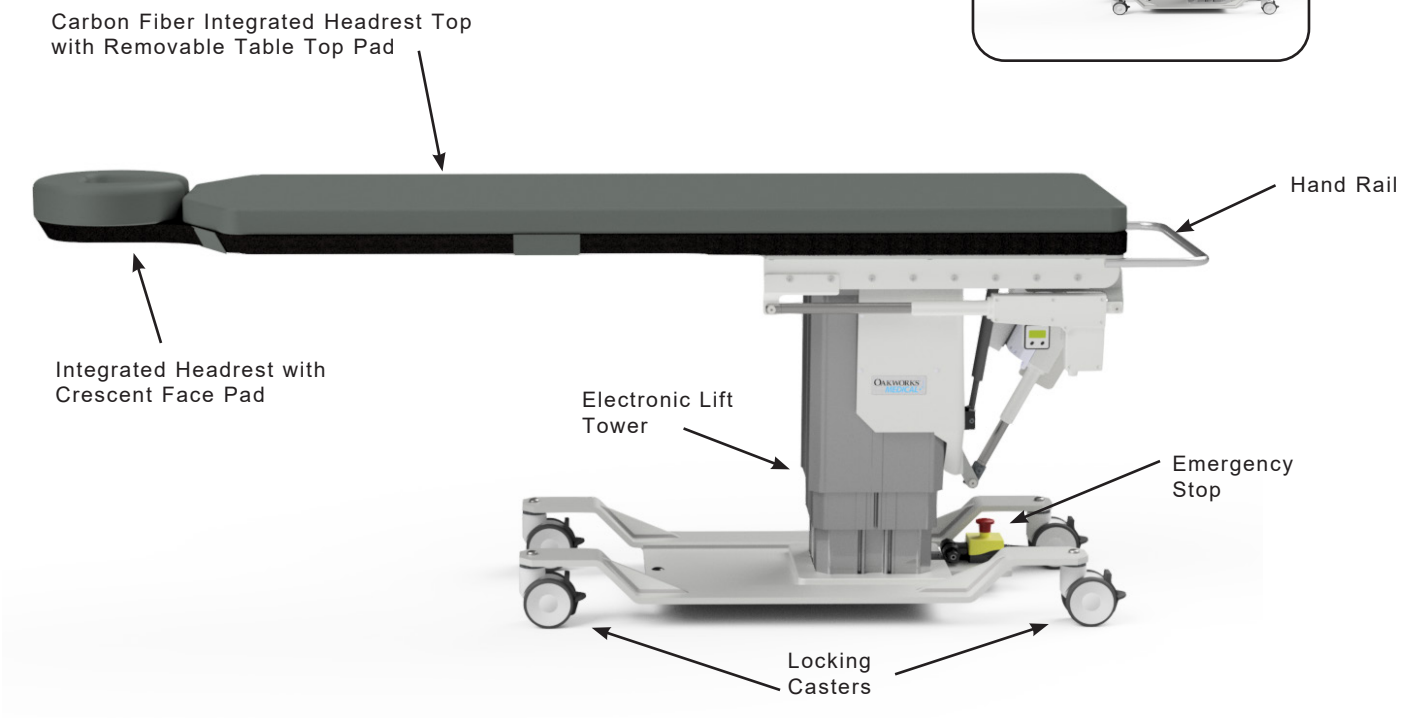

STANDARD SPECIFICATIONS	
Motion 1 w/o pad	Powered 25”-43” (64-109cm) Height Range
Motion 2	Powered 15° Trendelenburg Tilt Powered 11° Reverse Trendelenburg Tilt
Motion 3	Powered 10” (25cm) Longitudinal Travel
Hand Control	All powered motions
Choice of Tabletop: - Integrated Headrest - Rectangular	 22” (56cm) W x 84” (214cm) L 24” (61cm) W x 80” (203cm) L
Table Voltage Options	120V/60Hz or 230V/50Hz
Table Capacity	500 lbs. (227 kg) distributed evenly
4” (10 cm.) Locking Casters	Locking / Unlocking Casters for mobile or permanent positioning
Padding	2” (5cm) Comfort Foam™
Crescent Face Pad	Integrated Headrest Only
Patient Restraint Strap	Must be used during all procedures
Table Weight	538 lbs. (244 kg)

OPTIONS
5” (13cm) Locking Casters
International Electric Configurations
Foot Control
1” (2.5cm) Tabletop Pad
ACCESSORIES
Carbon Fiber Arm Board
Spine Positioning System II
Adjustable T-rail Clamp
Fluoro Extender

CONTROL OPERATIONS - CFPM 301

CAUTION

Do not apply excessive force to the foot control as it may damage the control.

Do not use the hand or foot control if signs of wear or damage are visible as this can cause unintentional motion.

The CFPM 301 offers Vertical Height, Trendelenburg Tilt, and Longitudinal Travel positioning with electronic ease. Operate the hand control and optional foot control as shown below to control these functions of the table. Test each of the table's functions prior to use with a patient. Store the hand control when not in use on the Hand Rail attached to the back of the tabletop.

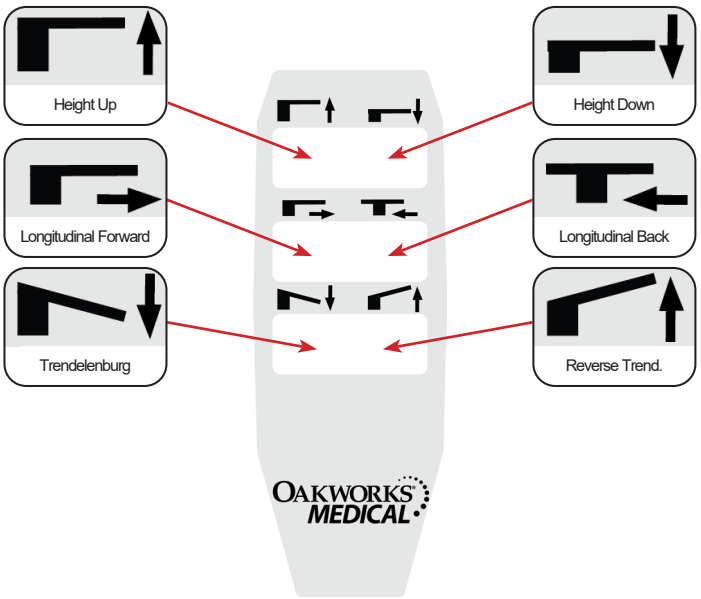

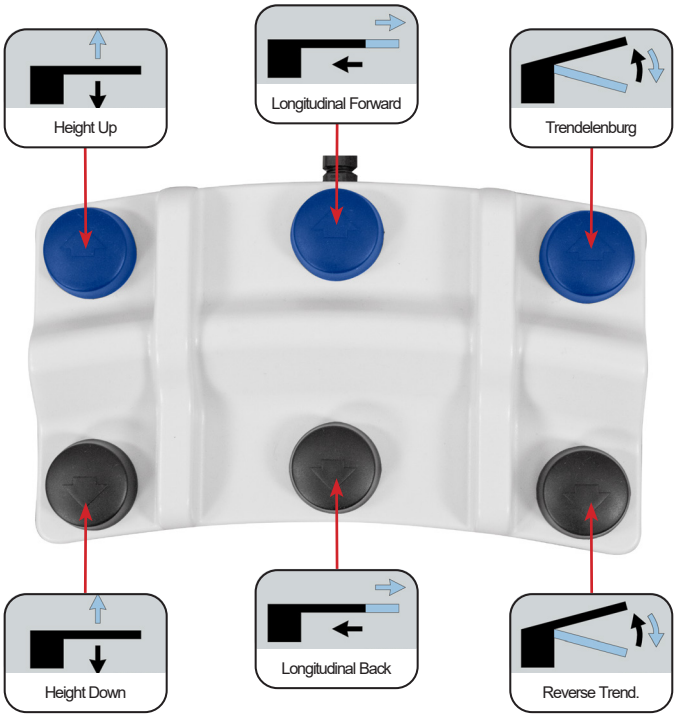

CAUTION

The Foot Control Riser Plate prevents the foot control from getting caught underneath the base of the table or between the column and the base as the column descends. This reduces the risk of unintentional movement of the table due to accidental activation of the foot control buttons.

CFPM302

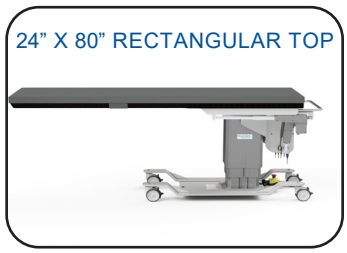

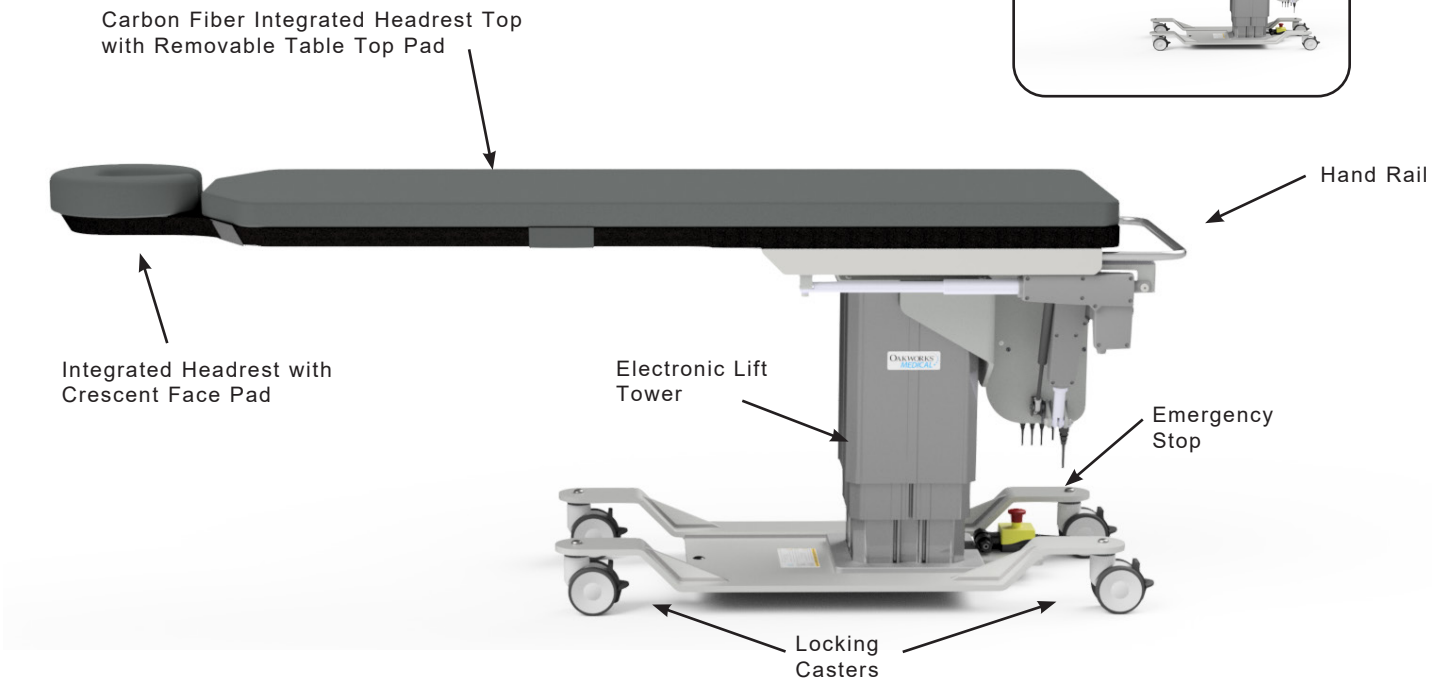

STANDARD SPECIFICATIONS	
Motion 1 w/o pad	Powered 25”-43” (64-109cm) Height Range
Motion 2	Powered ±15° Lateral Tilt
Motion 3	Powered 10” (25cm) Longitudinal Travel
Choice of Tabletop: - Integrated Headrest - Rectangular	 22” (56cm) W x 84” (214cm) L 24” (61cm) W x 80” (203cm) L
Table Voltage Options	120V/60Hz or 230V/50Hz
Table Capacity	500 lbs. (227 kg) distributed evenly
4” (10 cm.) Locking Casters	Locking / Unlocking Casters for mobile or permanent positioning
Padding	2” (5cm) Comfort Foam™
Crescent Face Pad	Integrated Headrest Only
Patient Restraint Strap	Must be used during all procedures
Table Weight	407 lbs. (185 kg)

OPTIONS
5” (13cm) Locking Casters
International Electric Configurations
Foot Control
1” (2.5cm) Tabletop Pad
ACCESSORIES
Carbon Fiber Arm Board
Spine Positioning System II
Adjustable T-rail Clamp
Fluoro Extender

For electrical specs, see Specifications section.

CONTROL OPERATIONS - CFPM 302

CAUTION

Do not apply excessive force to the foot control as it may damage the control.

Do not use the hand or foot control if signs of wear or damage are visible as this can cause unintentional motion.

The CFPM 302 offers Vertical Height, Longitudinal Travel, and Lateral Tilt positioning with electronic ease. Operate the hand control and optional foot control as shown below to control these functions of the table. Test each of the table's functions prior to use with a patient. Store the hand control when not in use on the Hand Rail attached to the back of the tabletop.

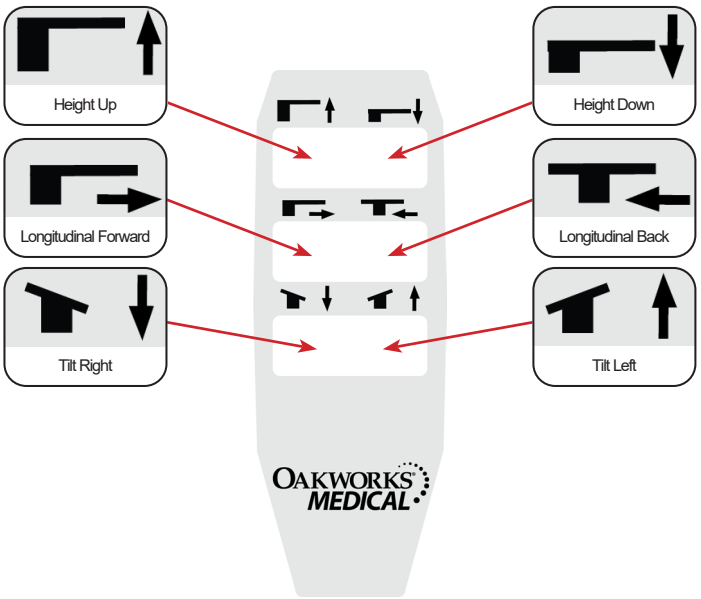

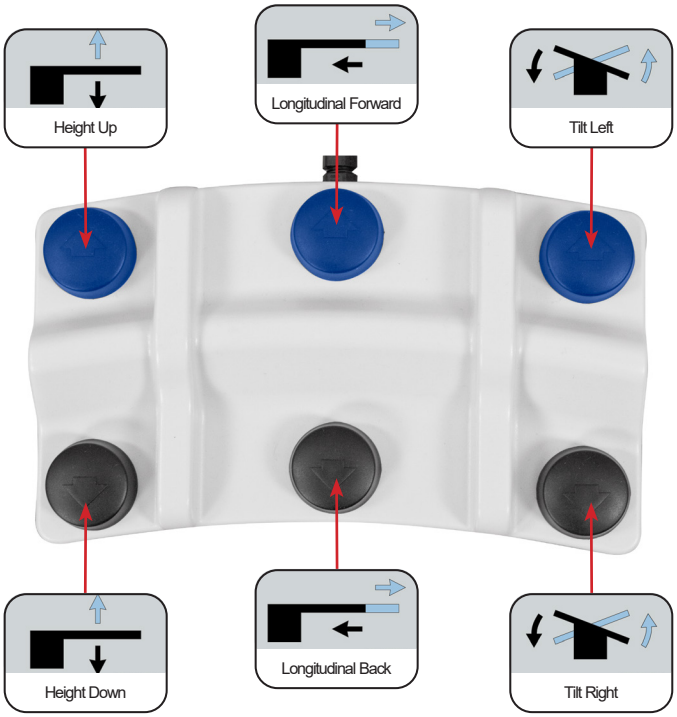

CAUTION

The Foot Control Riser Plate prevents the foot control from getting caught underneath the base of the table or between the column and the base as the column descends. This reduces the risk of unintentional movement of the table due to accidental activation of the foot control buttons.

CFPMB301 - Bariatric

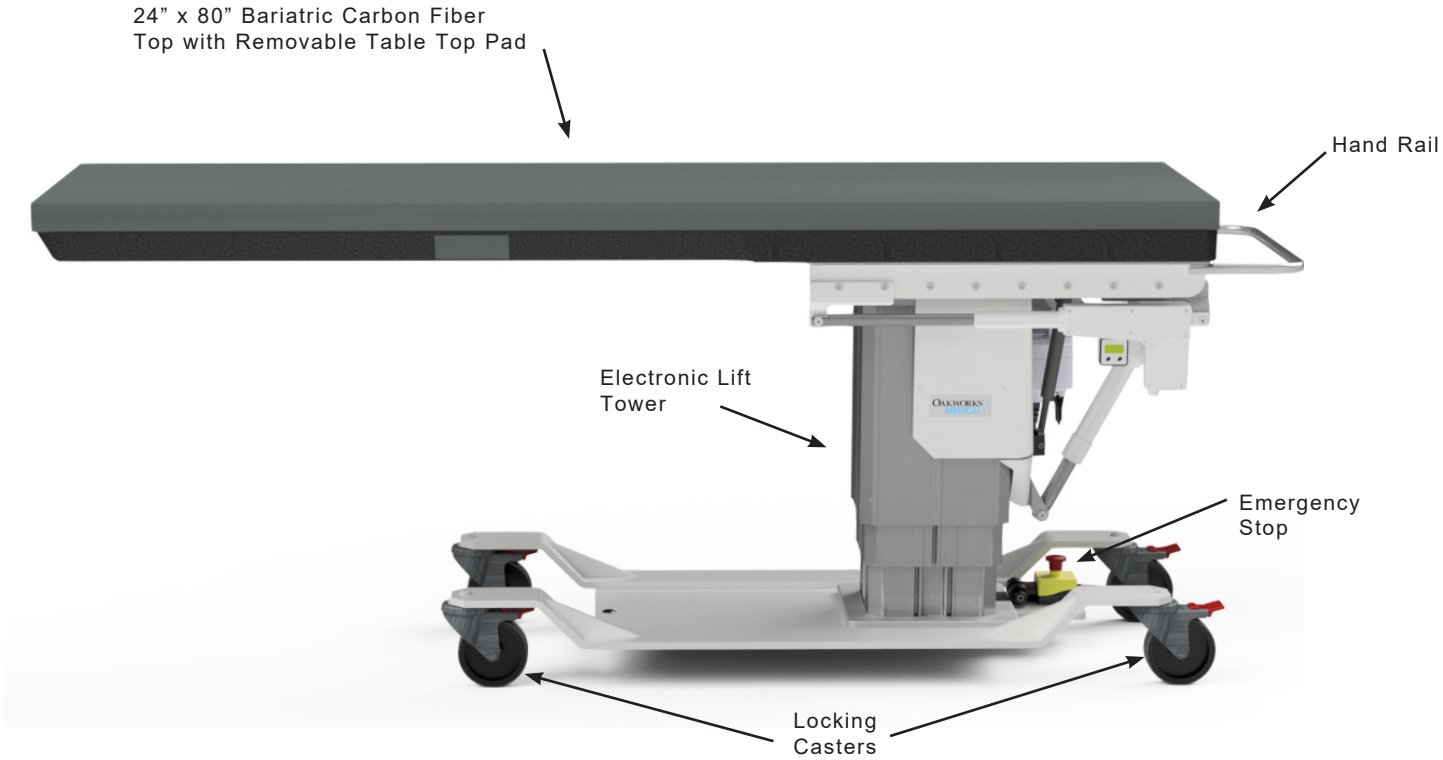

STANDARD SPECIFICATIONS	
Motion 1 w/o pad	Powered 26”-44” (66-112 cm) Height Range
Motion 2	Powered 15° Trendelenburg Tilt Powered 11° Reverse Trendelenburg Tilt
Motion 3	Powered 10” (25cm) Longitudinal Travel
Hand Control	All powered motions
Rectangular Top	24” (61cm) W x 80” (203cm) L
Table Voltage Options	120V/60Hz or 230V/50Hz
Table Capacity	750 lbs. (340 kg) distributed evenly
5” (12.5 cm.) Locking Casters	Locking / Unlocking Casters for mobile or permanent positioning
Patient Restraint Strap	Must be used during all procedures
Table Weight	573 lbs. (260 kg)

OPTIONS
International Electric Configurations
Foot Control
1” (2.5cm) Tabletop Pad
ACCESSORIES
Carbon Fiber Arm Board
Spine Positioning System II
Adjustable T-rail Clamp
Fluoro Extender

For electrical specs, see Specifications section.

CONTROL OPERATIONS - CFPMB 301 BARIATRIC

CAUTION

Do not apply excessive force to the foot control as it may damage the control.

Do not use the hand or foot control if signs of wear or damage are visible as this can cause unintentional motion.

The CFPMB 301 Bariatric offers Vertical Height, Trendelenburg Tilt, and Longitudinal Travel positioning with electronic ease. Operate the hand control and optional foot control as shown below to control these functions of the table. Test each of the table's functions prior to use with a patient. Store the hand control when not in use on the Hand Rail attached to the back of the tabletop.

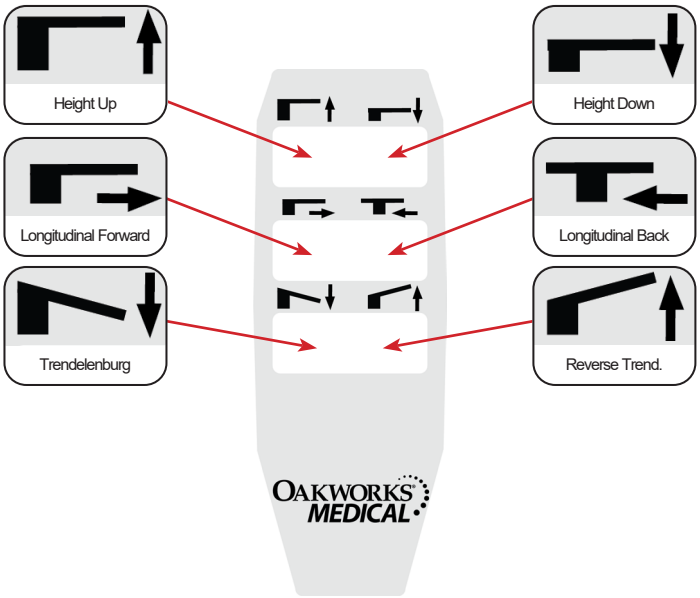

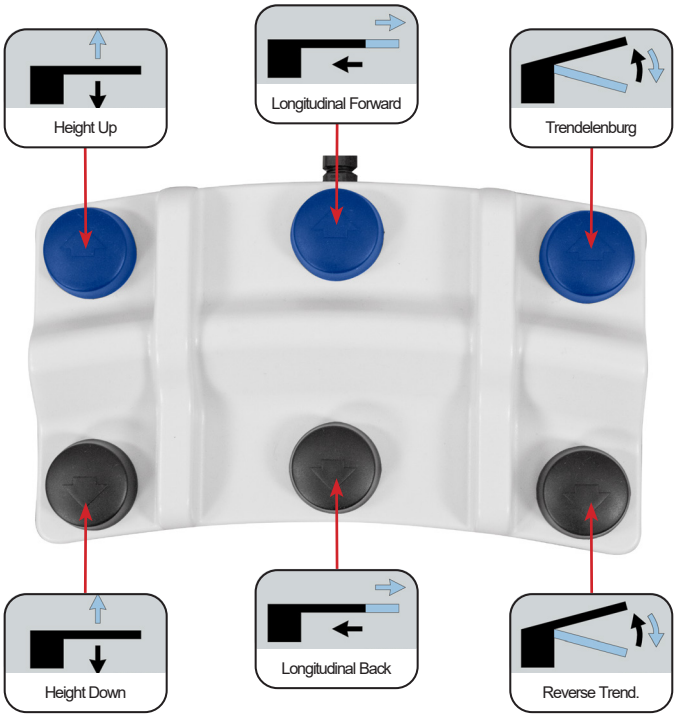

CAUTION

The Foot Control Riser Plate prevents the foot control from getting caught underneath the base of the table or between the column and the base as the column descends. This reduces the risk of unintentional movement of the table due to accidental activation of the foot control buttons.

CFPM401

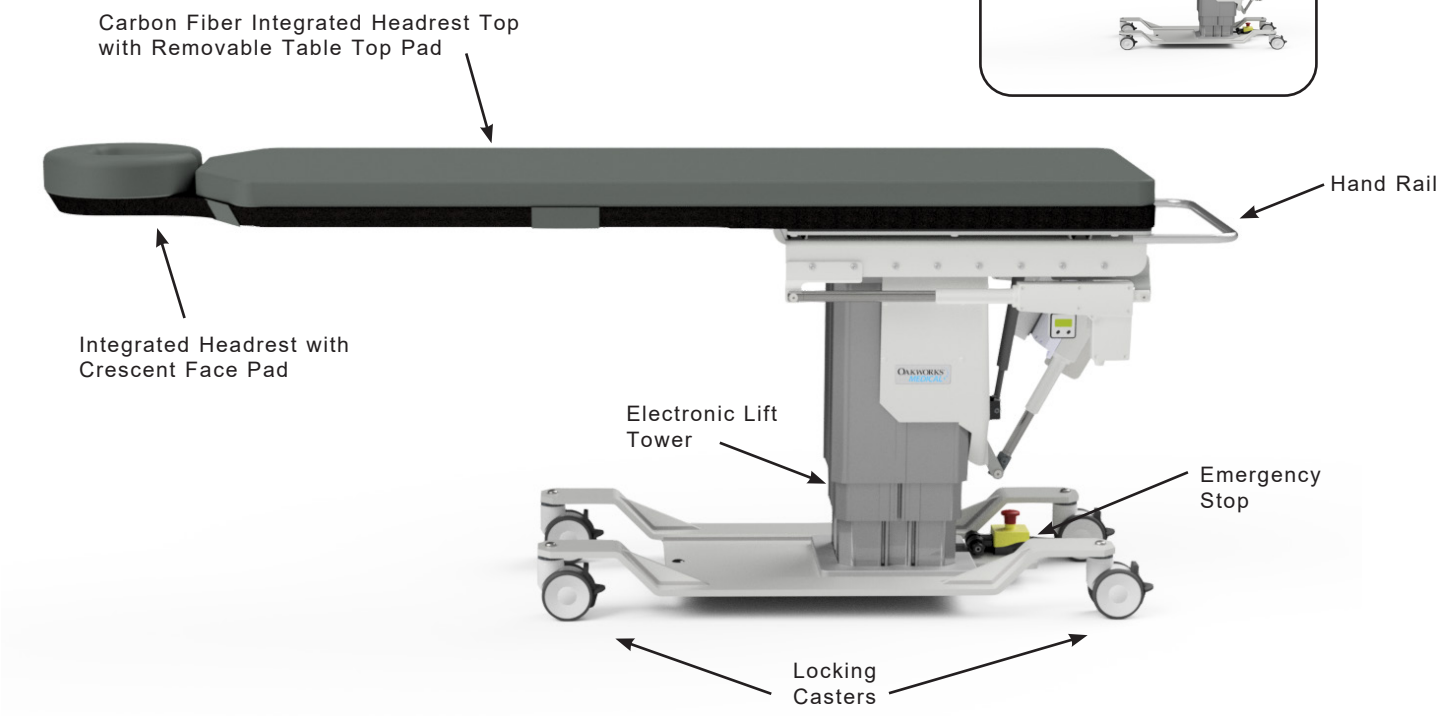

STANDARD SPECIFICATIONS	
Motion 1 w/o pad	Powered 26”-44” (66-112cm) Height Range
Motion 2	Powered 15° Trendelenburg Tilt Powered 11° Reverse Trendelenburg Tilt
Motion 3	Powered 10” (25cm) Longitudinal Travel
Motion 4	Powered 8” (20cm) Lateral Travel
Hand Control	All powered motions
Choice of Tabletop: - Integrated Headrest - Rectangular	 22” (56cm) W x 84” (214cm) L 24” (61cm) W x 80” (203cm) L
Table Voltage Options	120V/60Hz or 230V/50Hz
Table Capacity	500 lbs. (227 kg) distributed evenly
4” (10 cm.) Locking Casters	Locking / Unlocking Casters for mobile or permanent positioning
Padding	2” (5cm) Comfort Foam™
Crescent Face Pad	Integrated Headrest Only
Patient Restraint Strap	Must be used during all procedures
Table Weight	548 lbs. (249 kg)

OPTIONS
5” (13cm) Locking Casters
International Electric Configurations
Foot Control
1” (2.5cm) Tabletop Pad
ACCESSORIES
Carbon Fiber Arm Board
Spine Positioning System II
Adjustable T-rail Clamp
Fluoro Extender

CONTROL OPERATIONS - CFPM 401

CAUTION

Do not apply excessive force to the foot control as it may damage the control.

Do not use the hand or foot control if signs of wear or damage are visible as this can cause unintentional motion.

The CFPM 401 offers Vertical Height, Trendelenburg Tilt, Longitudinal Travel, and Lateral Travel positioning with electronic ease. Operate the hand control and optional foot control as shown below to control these functions of the table. Test each of the table's functions prior to use with a patient. Store the hand control when not in use on the Hand Rail attached to the back of the tabletop.

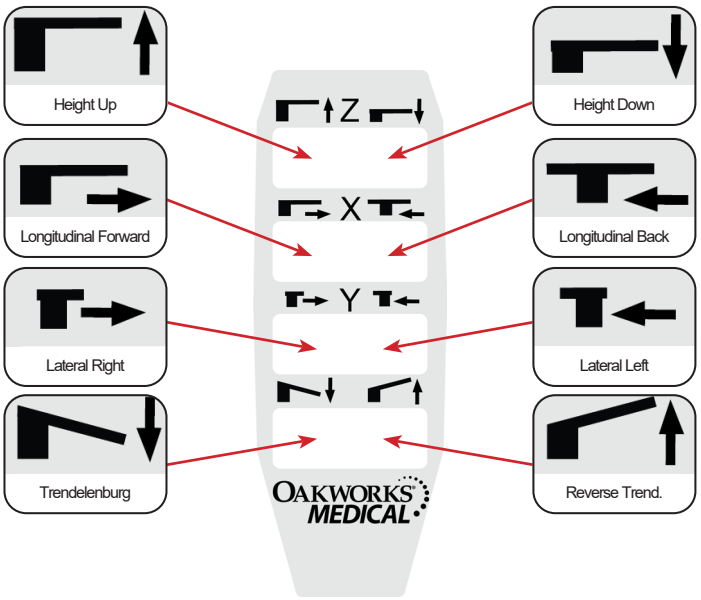

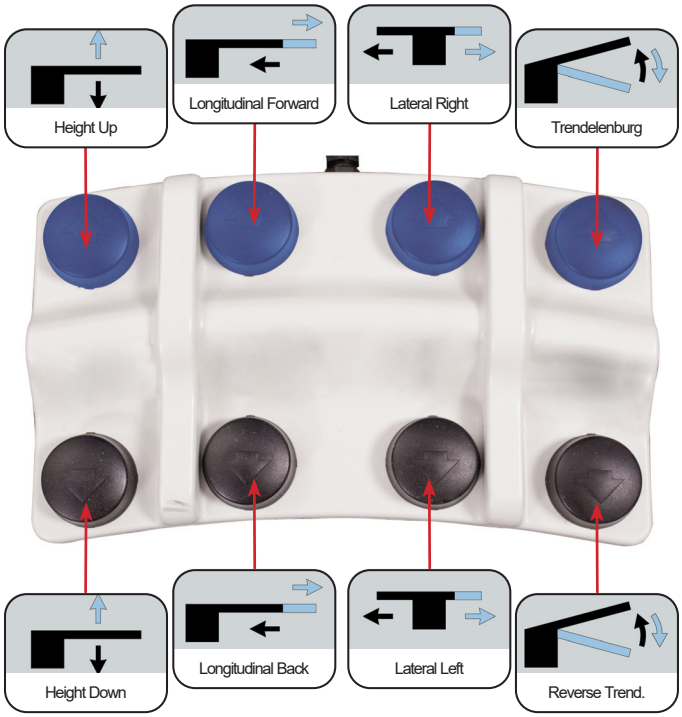

CAUTION

The Foot Control Riser Plate prevents the foot control from getting caught underneath the base of the table or between the column and the base as the column descends. This reduces the risk of unintentional movement of the table due to accidental activation of the foot control buttons.

CFLU401 - Lithotripsy/Urology Top

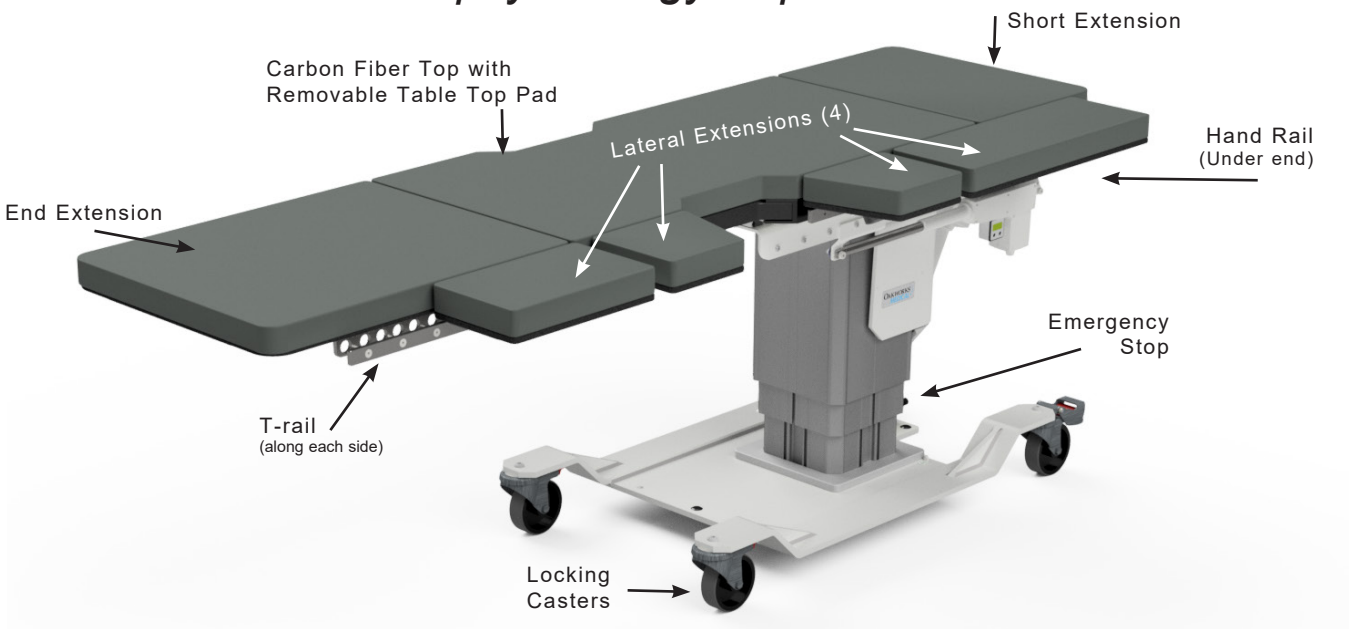

STANDARD SPECIFICATIONS			
Motion 1 w/o pad	Powered 27”-45” (66-112cm) Height Range	Table Weight	618 lbs. (280 kg)
Motion 2	Powered 15° Trendelenburg Tilt Powered 11° Reverse Trendelenburg Tilt	Urology Bag Hoop	Clips onto T-rails (bag not included)
Motion 3	Powered 10” (25cm) Longitudinal Travel	Integrated T-rails	.38” (1cm) Thick x 1.13” (3cm) High US Standard
Motion 4	Powered 8” (20 cm.) Lateral Travel	Patient Restraint Strap	Must be used during all procedures
Hand Control	All powered motions	5” (12.5 cm.) Locking Casters	Locking / Unlocking Casters for mobile or permanent positioning
Foot Control	All powered motions		
Main Top Dimensions	23” (58cm) W x 47” (119cm) L (Radiolucent dimensions: 19” (48cm) W x 23.7” (60cm))	Table Extensions	(1) 23” (58cm) W x 28” (71cm) L - End
			(1) 23” (58cm) W x 16” (41cm) L *OR* 23” (58cm) W x 20” (51cm) L - Short
Table Voltage Options	120V/60Hz or 230V/50Hz		(2) 8” (20cm) W x 11” (28cm) L - Lateral
Table Capacity	500 lbs. (227 kg) distributed evenly		(1) 8” (20cm) W x 14” (36cm) L - Lateral
	200 lbs. (91 kg) (on all extensions)		(1) 8” (20cm) W x 24” (61cm) L - Lateral
Padding	2” (5cm) Comfort Foam™		

OPTIONS
International Electric Configurations
1” (2.5cm) Tabletop Pad
ACCESSORIES
Carbon Fiber Arm Board
Fluoro Extender
Litho/Urology Drape

For electrical specs, see Specifications section.

CONTROL OPERATIONS - CFLU 401 LITHO/UROLOGY

CAUTION

Do not apply excessive force to the foot control as it may damage the control.

Do not use the hand or foot control if signs of wear or damage are visible as this can cause unintentional motion.

The CFLU 401 Litho/Urology offers Vertical Height, Trendelenburg Tilt, Longitudinal Travel, and Lateral Travel positioning with electronic ease. Operate the hand control and foot control as shown below to control these functions of the table. Test each of the table's functions prior to use with a patient. Store the hand control when not in use on the Hand Rail attached to the back of the tabletop.

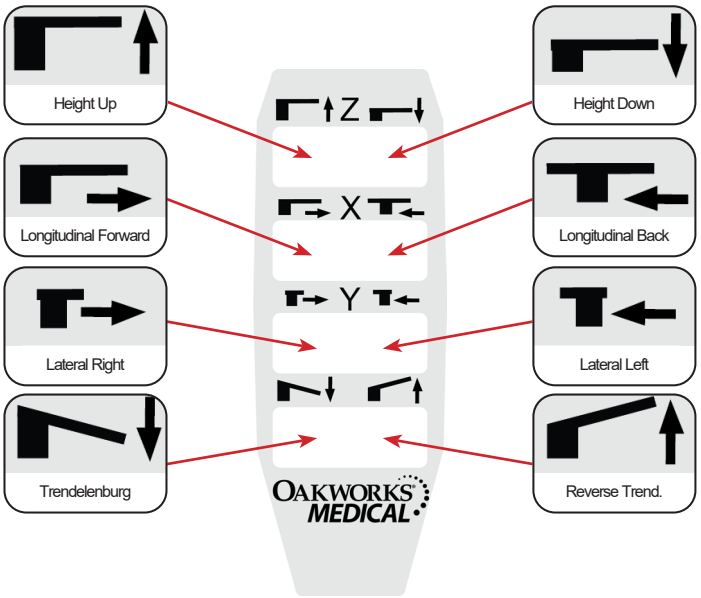

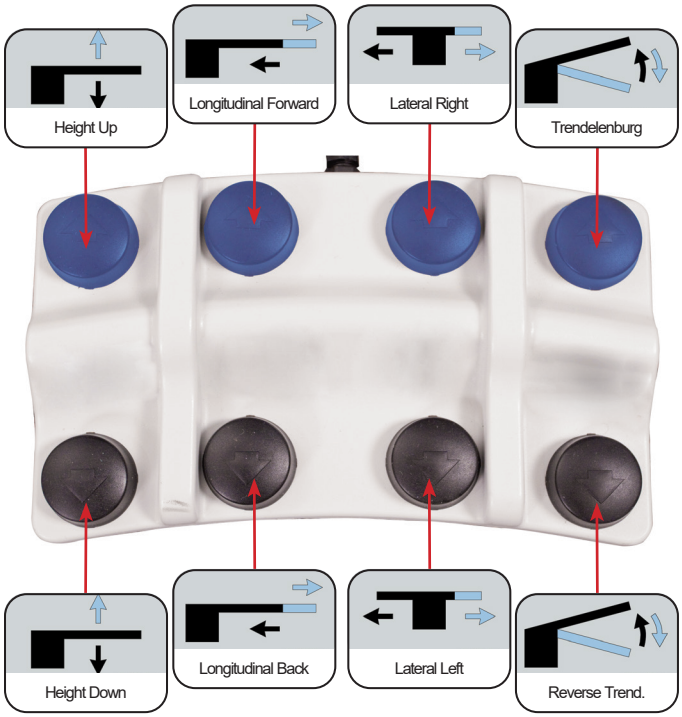

CAUTION

The Foot Control Riser Plate prevents the foot control from getting caught underneath the base of the table or between the column and the base as the column descends. This reduces the risk of unintentional movement of the table due to accidental activation of the foot control buttons.

CFUR301 - Urology Top

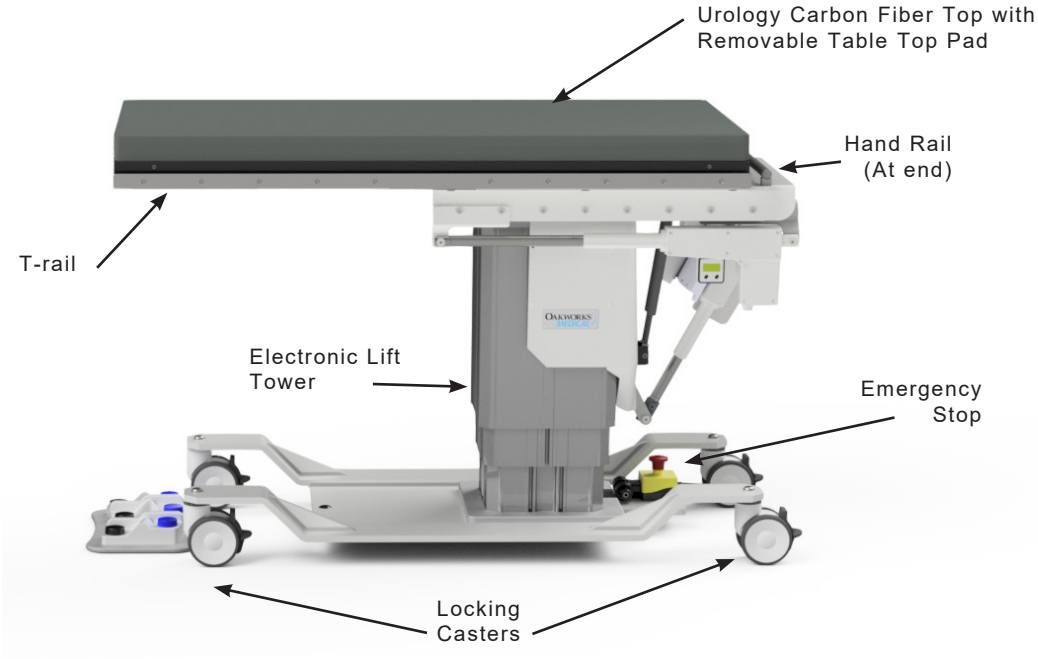

STANDARD SPECIFICATIONS	
Motion 1 w/o pad	Powered 25”-43” (64-109cm) Height Range
Motion 2	Powered 15° Trendelenburg Tilt Powered 11° Reverse Trendelenburg Tilt
Motion 3	Powered 10” (25cm) Longitudinal Travel
Hand Control	All powered motions
Foot Control	All powered motions
Main Top Dimensions	23” (58cm) W x 47” (119cm) L (Radiolucent dimensions: 19” (48cm) W x 23.7” (60cm))
Table Extensions	(1) 23” (58.4 cm.) W x 28” (71.1 cm.) L - End
	(2) 5” (12.5 cm.) W x 24” (61 cm.) L - Lateral
Integrated T-rails	.38” (1cm) Thick x 1.13” (3cm) High US Standard
Urology Bag Hoop	Clips onto T-rails (bag not included)
Table Capacity	500 lbs. (227 kg) distributed evenly
	200 lbs. (91 kg) (on all extensions)
4” (10 cm.) Locking Casters	Locking / Unlocking Casters for mobile or permanent positioning
Padding	2” (5 cm.) Comfort Foam™
Patient Restraint Strap	Must be used during all procedures
Table Weight	568 lbs. (258 kg)

OPTIONS
5” (13cm) Locking Casters
International Electric Configurations
1” (2.5cm) Tabletop Pad
ACCESSORIES
Carbon Fiber Arm Board
Fluoro Extender
Litho/Urology Drape

CONTROL OPERATIONS - CFUR 301 UROLOGY

CAUTION

Do not apply excessive force to the foot control as it may damage the control.

Do not use the hand or foot control if signs of wear or damage are visible as this can cause unintentional motion.

The CFUR 301 Urology offers Vertical Height, Trendelenburg Tilt, and Longitudinal Travel positioning with electronic ease. Operate the hand control and foot control as shown below to control these functions of the table. Test each of the table's functions prior to use with a patient. Store the hand control when not in use on the Hand Rail attached to the back of the tabletop.

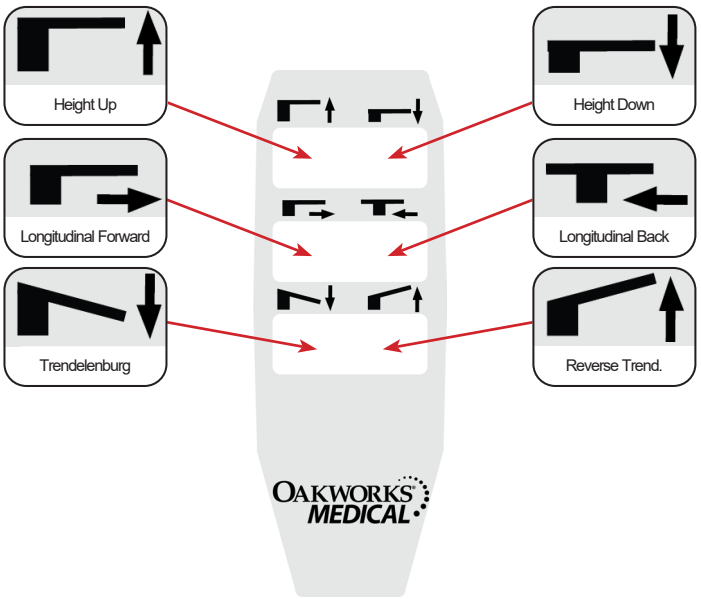

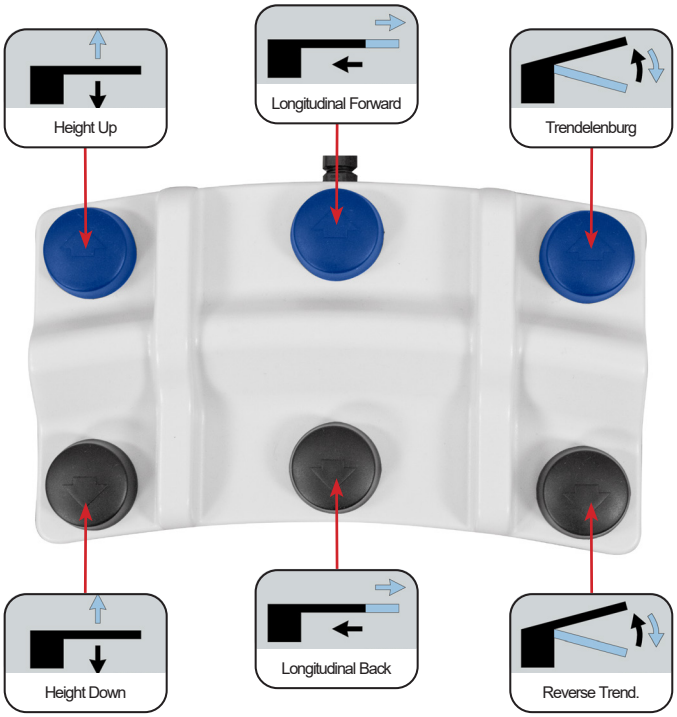

CAUTION

The Foot Control Riser Plate prevents the foot control from getting caught underneath the base of the table or between the column and the base as the column descends. This reduces the risk of unintentional movement of the table due to accidental activation of the foot control buttons.

CFUR401 - Urology Top

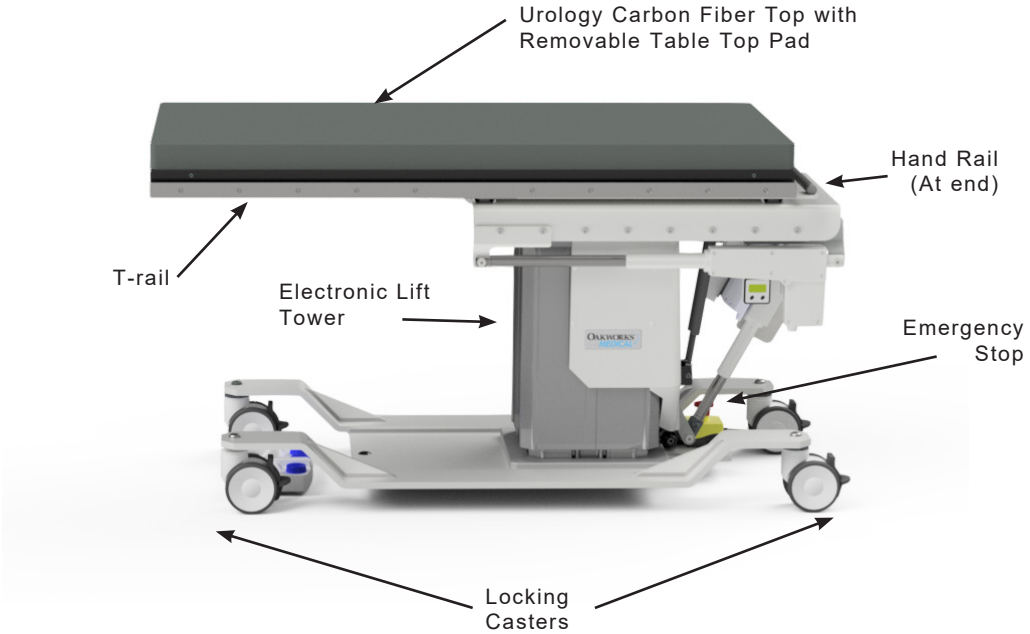

STANDARD SPECIFICATIONS	
Motion 1 w/o pad	Powered 28”-46” (71-117cm) Height Range
Motion 2	Powered 15° Trendelenburg Tilt Powered 11° Reverse Trendelenburg Tilt
Motion 3	Powered 10” (25cm) Longitudinal Travel
Motion 4	Powered 8” (20cm) Lateral Travel
Hand Control	All powered motions
Foot Control	All powered motions
Main Top Dimensions	23” (58cm) W x 47” (119cm) L (Radiolucent dimensions: 19” (48cm) W x 23.7” (60cm))
Table Extensions	(1) 23” (58cm) W x 28” (71cm) L - End
	(2) 5” (13cm) W x 24” (61cm) L - Lateral
Integrated T-rails	.38” (1cm) Thick x 1.13” (3cm) High US Standard
Urology Bag Hoop	Clips onto T-rails (bag not included)
Table Capacity	500 lbs. (227 kg) distributed evenly
	200 lbs. (91 kg) (on all extensions)
4” (10 cm.) Locking Casters	Locking / Unlocking Casters for mobile or permanent positioning
Padding	2” (5cm) Comfort Foam™
Patient Restraint Strap	Must be used during all procedures
Table Weight	590 lbs. (268 kg)

OPTIONS
5” (13cm) Locking Casters
International Electric Configurations
1” (2.5cm) Tabletop Pad
ACCESSORIES
Carbon Fiber Arm Board
Fluoro Extender
Litho/Urology Drape

For electrical specs, see Specifications section.

CONTROL OPERATIONS - CFUR 401 UROLOGY

CAUTION

Do not apply excessive force to the foot control as it may damage the control.

Do not use the hand or foot control if signs of wear or damage are visible as this can cause unintentional motion.

The CFUR 401 Urology offers Vertical Height, Trendelenburg Tilt, Longitudinal Travel, and Lateral Travel positioning with electronic ease. Operate the hand control and foot control as shown below to control these functions of the table. Test each of the table's functions prior to use with a patient. Store the hand control when not in use on the Hand Rail attached to the back of the tabletop.

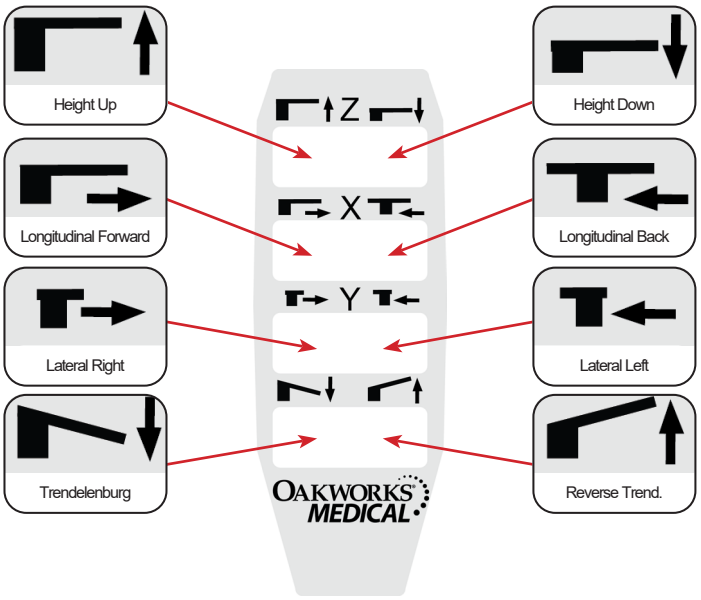

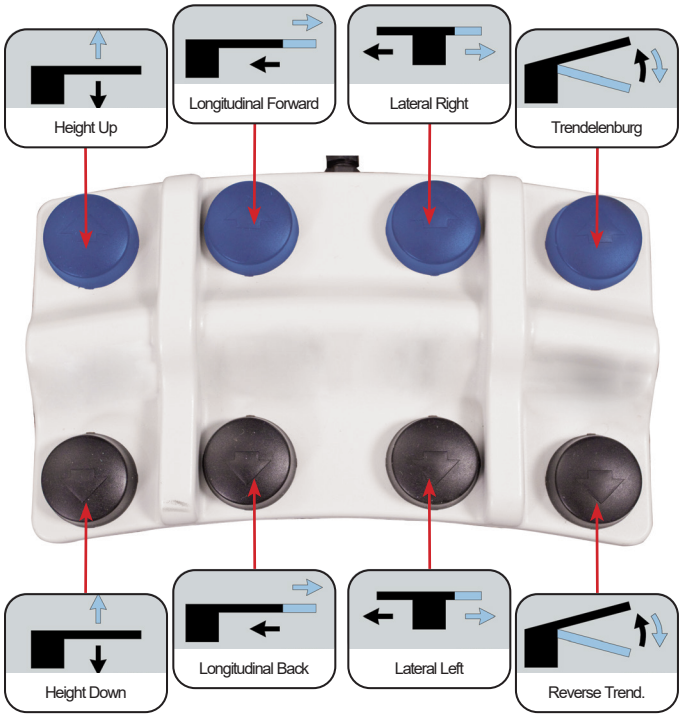

CAUTION

The Foot Control Riser Plate prevents the foot control from getting caught underneath the base of the table or between the column and the base as the column descends. This reduces the risk of unintentional movement of the table due to accidental activation of the foot control buttons.

INSTALLING TABLE

The Imaging and Pain Management Tables come completely assembled and ready to use. Plug the cord into a functioning outlet that is rated for the table. (See Grounding below)

Arrange the power cord and control cords so that they will not create a tripping hazard and where the controls are located to your liking and are conveniently accessible.

Be sure access to plug is not blocked for disconnecting the table from power.

If a power outage does occur and the facility is running on emergency power, the supplied power must meet the input requirements listed in the Electrical Specification section.

GROUNDING

DANGER Risk of Electric Shock - Connect this furnishing to a properly grounded outlet only.

This product must be grounded. If it should malfunction or break down, grounding provides a path of least resistance for electrical current to reduce the risk of electric shock. This product is equipped with a cord having an equipment-grounding conductor and a grounding pin. The pin must be plugged into an appropriate outlet that is properly installed and grounded in accordance with all local codes and ordinances. See U.S. sample below.

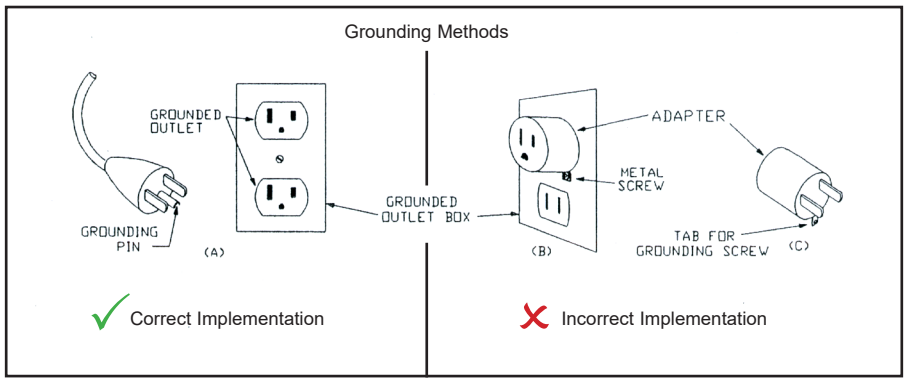

Improper connection of the equipment-grounding conductor can result in a risk of electric shock. Check with a qualified electrician or service person if you are in doubt as to whether the product is properly grounded. Do not modify the plug provided with the product - if it will not fit the outlet; have a proper outlet installed by a qualified electrician.

BUBBLE LEVEL

Bubble level is installed on the handle of the table to aid the operator in determining the horizontal plane.

PATIENT RESTRAINT STRAPS

CAUTION The two Patient Restraint Strap should be used during procedures to prevent the patient from moving on the table.

The strap has hook and loop fasteners attached to the ends. The strap is attached as follows:

1. Place the center of each strap around the patient at two places. Relocate the straps as necessary for adequate clearance.

2. Take the ends of each strap down around the tabletop. Pull each strap snug underneath the table and press the two ends together.

3. Check both straps to assure adequate patient restraint prior to using the Trendelenburg functions.

REMOVE / REPLACE THE TABLE TOP PAD

CAUTION Make sure the top is not in motion when removing / replacing the table top pad.

Remove Table Pad by pulling flaps at the ends & sides of the table until the hook and loop fastener becomes unanchored.

Replace pad by first centering on the table and then pressing flaps in place, anchoring with the hook and loop fasteners.

Underside of Table

ADJUSTING THE CRESCENT FACE PADS (INTEGRATED HEADREST TOPS ONLY)

PRONE/SUPINE POSITIONING:

The Crescent Face Pad is held in place by hook and loop fasteners.

Place close in to the edge of the table with sides together for smaller patients or further away from the edge with sides apart for larger patients.

LOCKING CASTERS USE

All four casters should be locked at all times during use with a patient.

LOCKING THE CASTERS:

1. Place your shoe on the end of the casters locking tab.
2. Press firmly downward until you hear a clicking noise and the caster is locked.

UN-LOCKING THE CASTERS:

1. Place your shoe against the vertical locking tab.
2. Push firmly inward until you hear a clicking noise and the caster is unlocked.

EMERGENCY STOP

All electric tables are equipped with an emergency stop switch to cut power from the table in an emergency. Note that this is not a table reset.

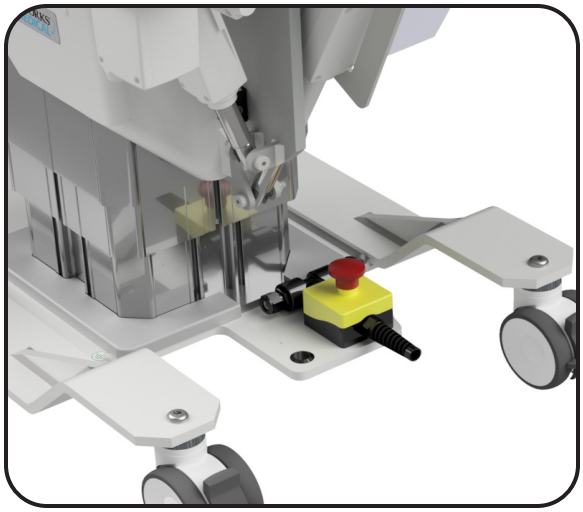
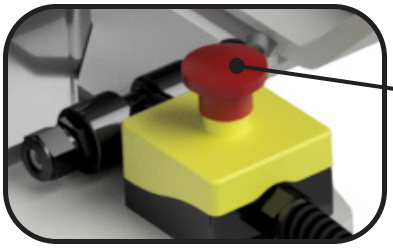

To stop the operation, push the red button.

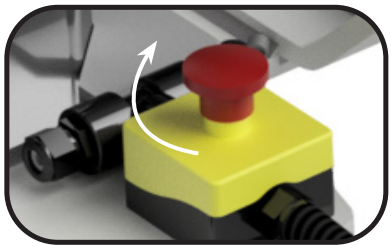

To reset, rotate the red button clockwise.

If necessary, you can also remove the plug from the outlet. Be sure access is not blocked for disconnecting the table from power.

WEIGHT CAPACITY & PATIENT USE

CAUTION The tabletop is rated at 500 lb. (227 kg) load evenly distributed. (Bariatric table is rated at 750 lbs. (340 kg)). To minimize any risk to the patient, do not allow the patient to sit on the headrest area beyond the warning line on the tabletop. Casters should be locked when patient is mounting or dismounting the table. Table should be flat when mounting and dismounting. Patient should mount and dismount near the lifting column. Tabletop should be moved fully to the rear after each use.

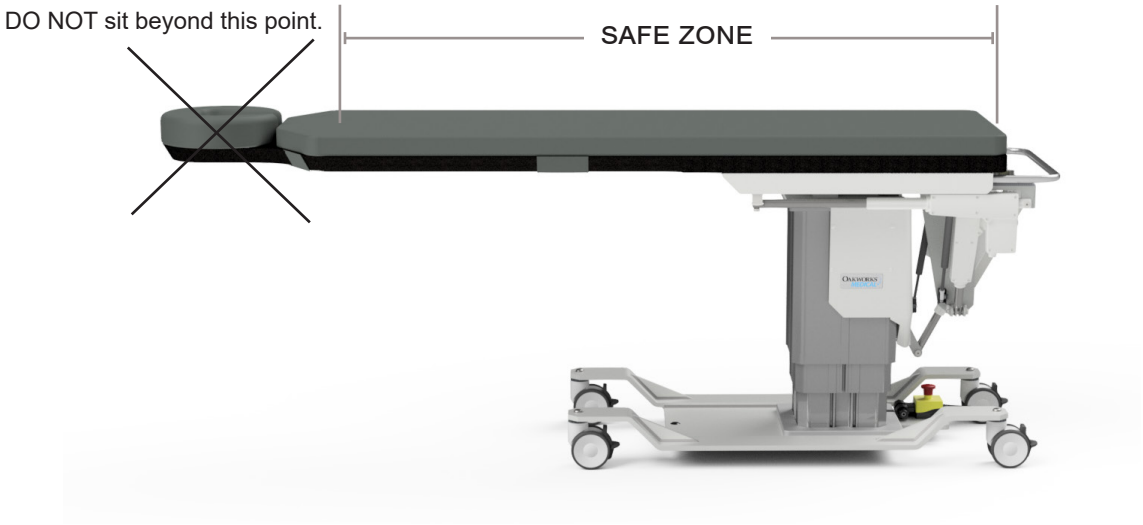

UROLOGY TABLE BAG HOOP

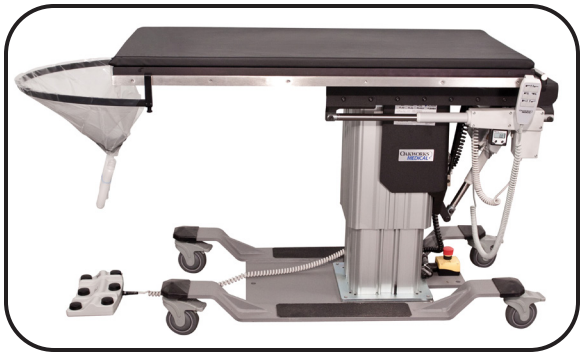

1. Slide bag over Urology hoop.

2. Attach ends of hoop to the ends of the table T-rails. Tighten hoop ends to the T-rail.

Completed assembly.

LATERAL EXTENSIONS - LITHOTRIPSY/UROLOGY & UROLOGY TOPS

CAUTION Do not sit on any extensions. Weight Limit: 200 lbs. / 91 kg.

There are four lateral extensions for the Lithotripsy table. (2) - 8” x 11” (20 x 28cm), (1) - 8” x 14” (20 x 36cm), and (1) - 8” x 24”(20 x 61cm).

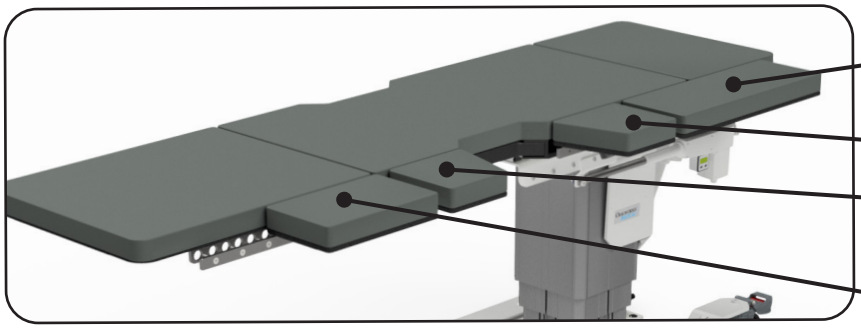

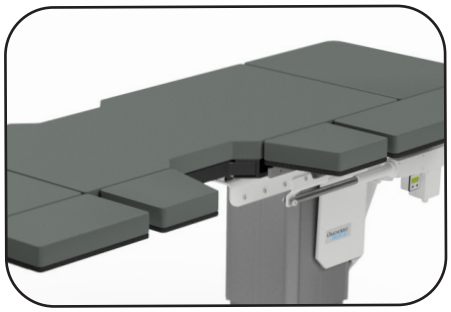

The 2 - 8” x 11” (20 x 28cm) are angled and designed to be used on both sides of the Lithotripsy opening.

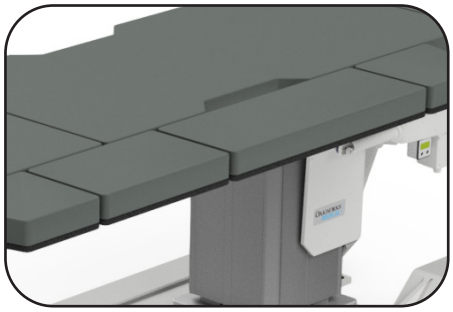

The 1 - 8” x 24” (20 x 61cm) extension is designed to bridge the Lithotripsy opening.

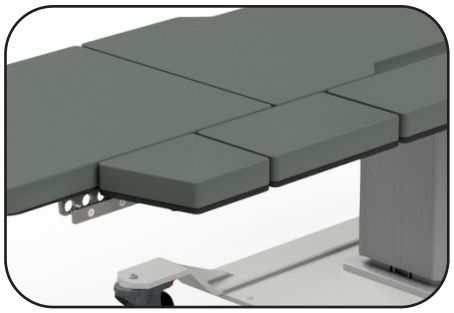

The 8” x 14” (20 x 36cm) extension can be used as required for your procedure along with other extensions.

The Lateral Extensions are clamped to the T-rail with a locking clamp design.

CAUTION
Tighten knob securely to prevent loosening of the extension

There are 2 lateral extensions for the Urology Table (2) 5” x 24” (13 x 61cm). These extensions can be used as required to extend the effective width of the table top.

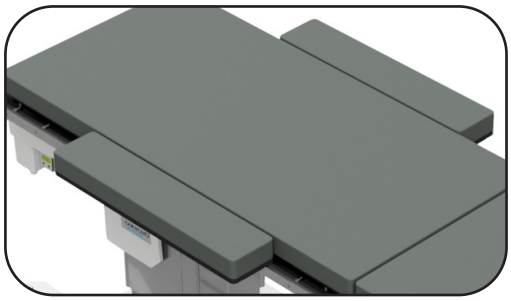

END EXTENSIONS - LITHOTRIPSY/UROLOGY & UROLOGY TOPS

CAUTION Do not sit on any extensions. Weight Limit: 200 lbs. / 91 kg.

There are extensions which can be inserted on either end of the table. (1) - 23” x 28” (58 x 71cm) and (1) - 23” x 16” (58 x 41cm) - Lithotripsy/Urology, (1) - 23” x 28” (58 x 71cm) - Urology

TO INSERT EXTENSION

Slide the two “arms” into the ends of the table top. Push fully in and extension arms will drop slightly into a locking pin.

TO REMOVE EXTENSION

Lift extension slightly and pull away from table top.

INCORRECT ATTACHMENT

The extension should be level with the table top and flat against the end of the table.

CORRECT ATTACHMENT

Pull on the extension to ensure that it is locked in place.

LITHOTRIPSY TABLE USED AS A UROLOGY TABLE

If the extensions are removed from the Lithotripsy Table, the table can be used as a Urology Table. A bag hoop is included with your table. (Refer to Urology Table Bag Hoop directions for use).

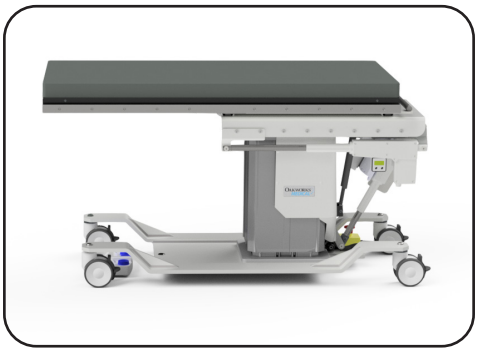

CARBON FIBER ARM BOARD (ACCESSORY)

CAUTION

Do not place undue weight or downward pressure on the Carbon Fiber Arm Board. It is a positioning device for the arms and should not be used as leverage to get on or off the table. Injury can occur. DO NOT exceed 30 lbs. (14 kg.) of load on the Support Section. Injury can occur.

USE

This radiolucent device can be used with any flat support surface where ionizing radiation (x-ray) is utilized for imaging. It can be used to support arms and feet.

DIRECTIONS

Unfold the Arm Board and slide the **Base Section** under the patient and the table pad. Position the patient and the **Support Section** to suit the needs of the procedure. The weight of the patient will hold the Arm Board in place.

Rotate the **Support Section** to the desired position. This section rotates up to 180º.

Prone Position at 135º

Supine Position at 180º

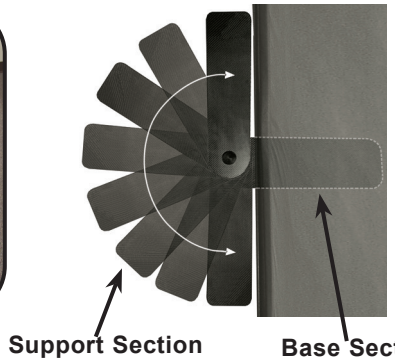

To remove the Arm Board, ask the patient to move their limb off the **Support Section** and lift their body slightly. This will allow you to pull out the base section of the Arm Board.

Fold the **Base and Support sections** for storage.

T-RAIL CLAMP USE (ACCESSORY)*

CAUTION

Recheck tightness of T-Rail Clamp in between procedures.
Ensure that the lower part of the clamp is in the tabletop groove under the table top.
Ensure the T-Rail Clamp is tight and can not move with pressure.

1. The clamp must be installed only on an Oakworks CFPM product with the groove on the underside of the table.
2. Slide the clamp in the groove to the desired position on the table top.
3. Ensure the lower part of the clamp is aligned with and in the groove of the table top. Tighten the clamp using the handle.
4. Attempt to slide the clamp. Ensure the clamp will not move and is secured tightly to the tabletop.
5. The handle can be rotated without loosen up the clamp. To move the handle out of your way, lift the handle up and rotate towards the inside of the table, then release the handle to reengage. The handle can then be used to tighten or loosen the clamp and slide to a different position on the tabletop.

Note: The Integrated T-Rails are US standard size of .38" (1cm) thick by 1.13" (3cm) wide.

SPINE POSITIONING SYSTEM II (ACCESSORY)

For directions on the use of the Spine Positioning System, refer to the SPS II User Manual.

FLUORO EXTENDER (ACCESSORY)

CAUTION Do not place undue weight or downward pressure on the Fluoro Extender. It is a positioning device for the arms and should not be used as leverage to get on or off the table. Injury can occur.

The Oakworks Fluoro Extender is radiolucent and offers extra width only where you need it for greater positioning accuracy with optimum imaging. The Fluoro Extender is inserted under the table top pad.

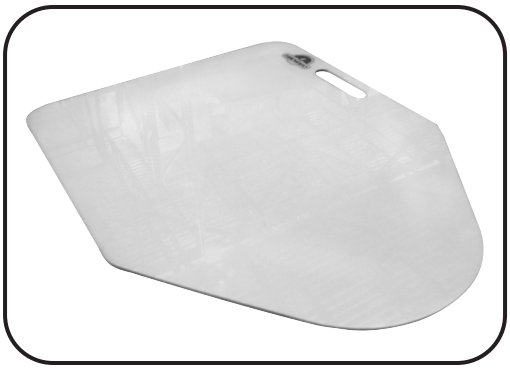

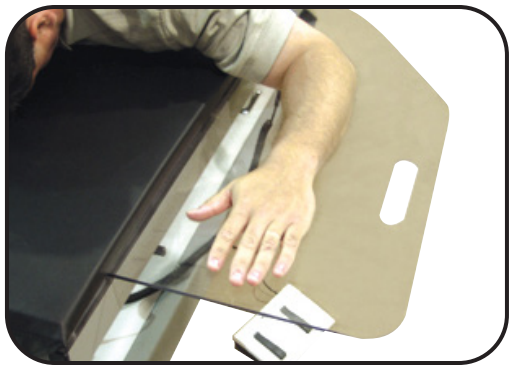

USABLE IMAGING AREA - CFPM100 INTEGRATED HEADREST TOPS ONLY

CENTERED FOR A-P VIEW:

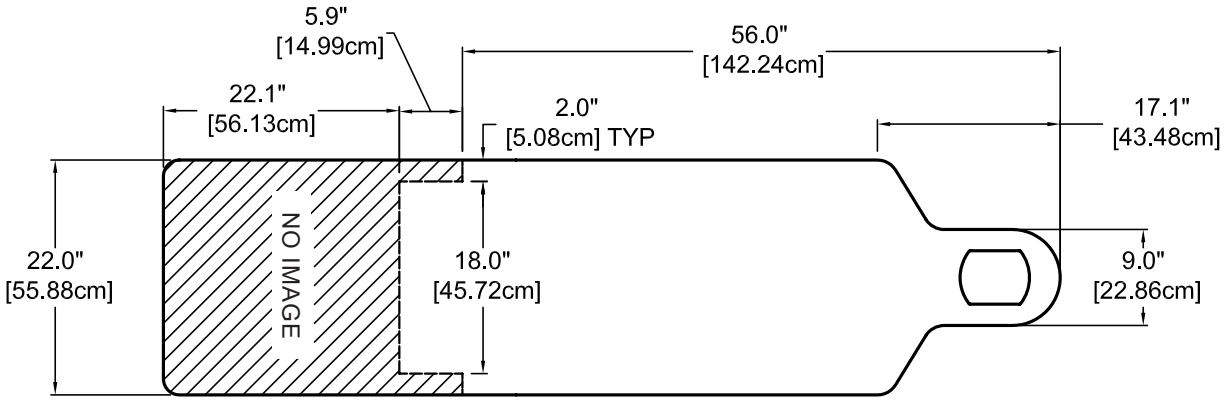

OBLIQUE 30° VIEW FOR VERTICAL:

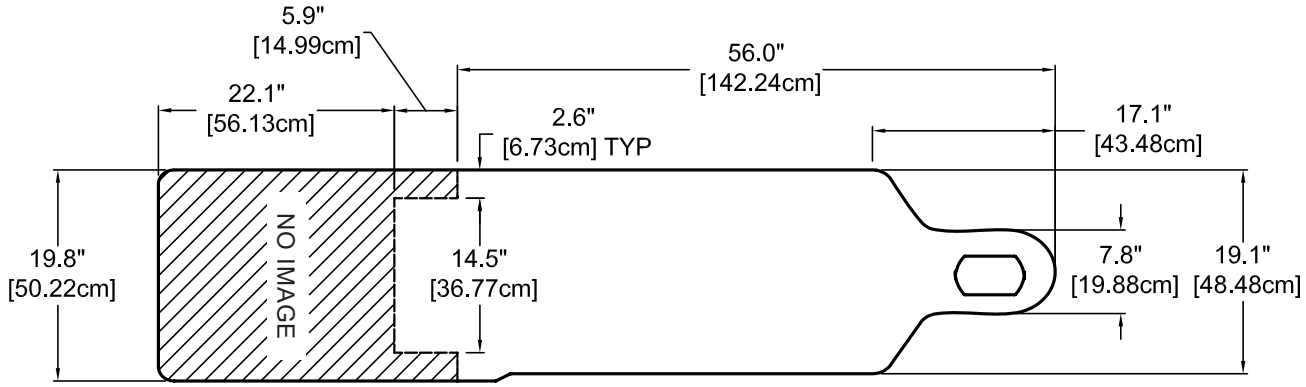

CAUDAL 30° VIEW FOR VERTICAL:

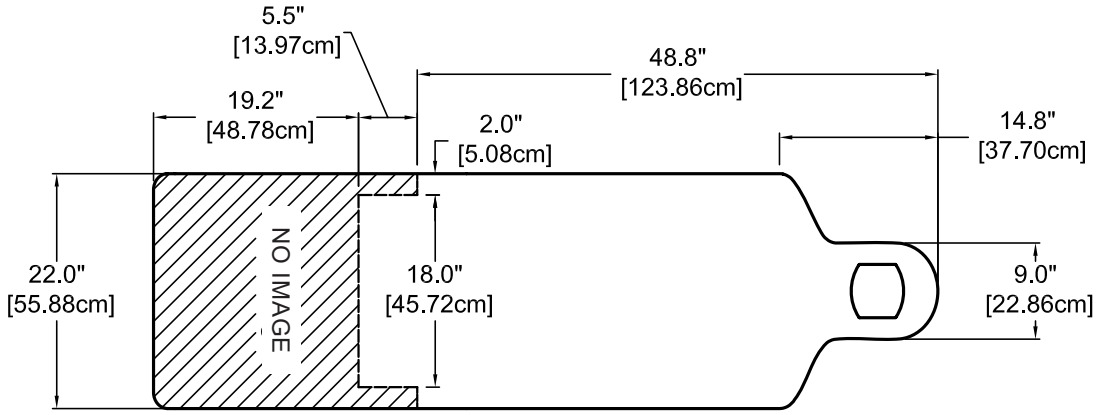

USABLE IMAGING AREA - CFPM100 RECTANGULAR TOPS ONLY

CENTERED FOR A-P VIEW:

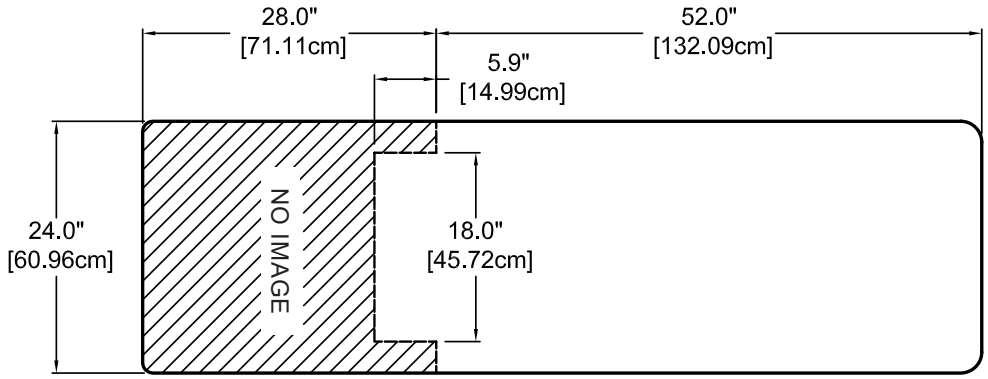

OBLIQUE 30° VIEW FOR VERTICAL:

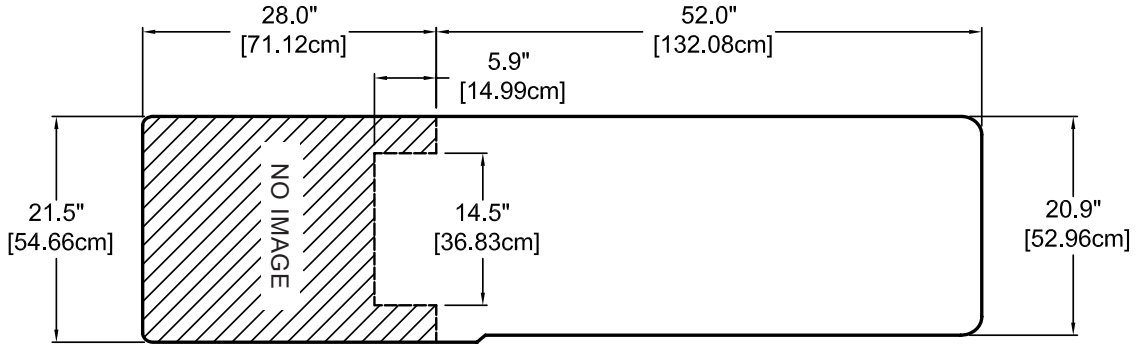

CAUDAL 30° VIEW FOR VERTICAL:

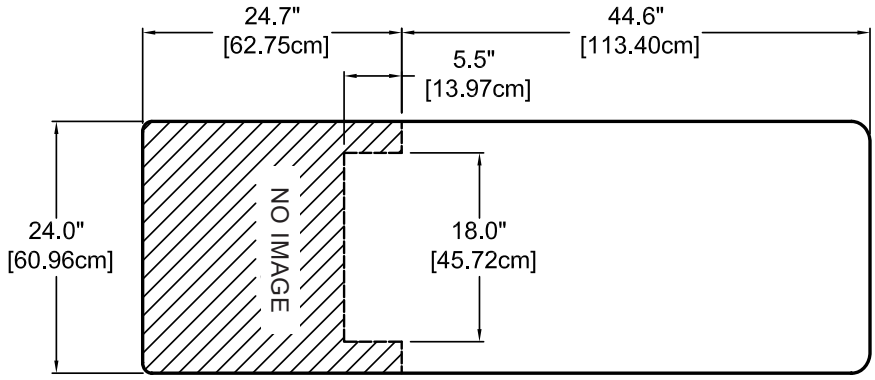

USABLE IMAGING AREA - CFPM200, CFPM201, CFPM300, CFPM301, CFPM302, CFPM400, & CFPM401 INTEGRATED HEADREST TOPS ONLY

CENTERED FOR A-P VIEW:

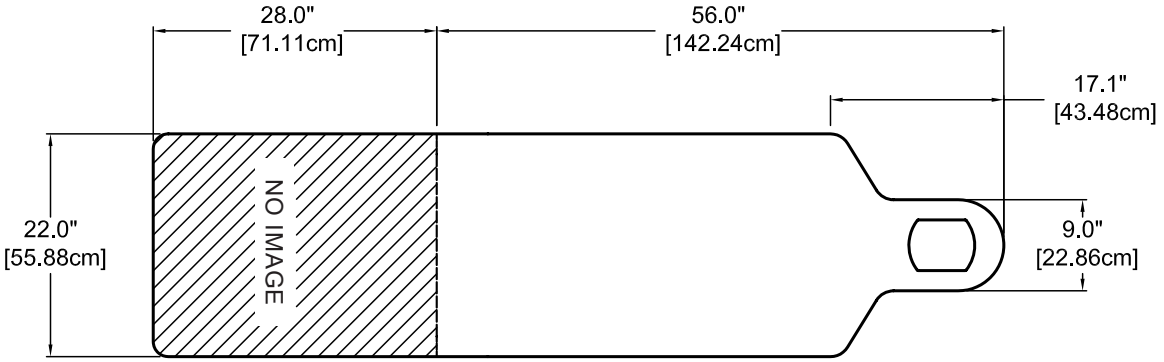

OBLIQUE 30° VIEW FOR VERTICAL:

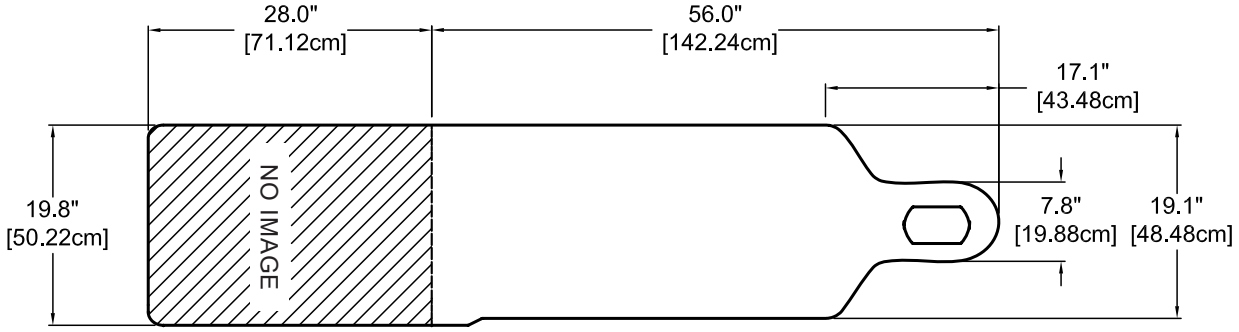

CAUDAL 30° VIEW FOR VERTICAL:

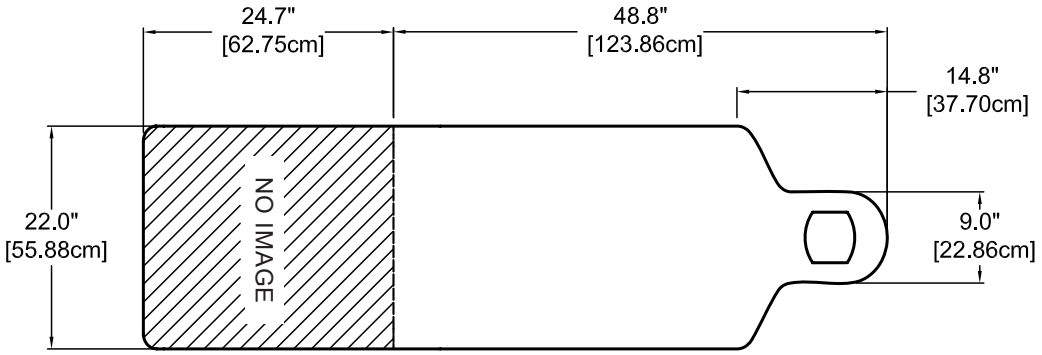

USABLE IMAGING AREA - CFPM200, CFPM201, CFPM300, CFPM301, CFPM302, CFPM400, & CFPM401 RECTANGULAR TOPS ONLY

CENTERED FOR A-P VIEW:

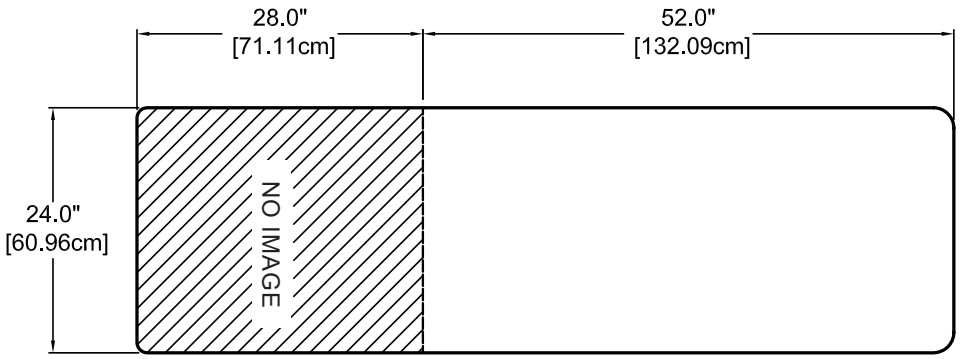

OBLIQUE 30° VIEW FOR VERTICAL:

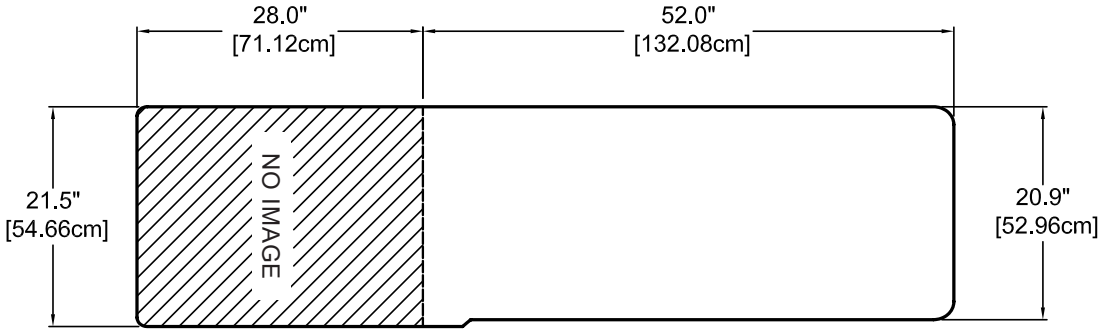

CAUDAL 30° VIEW FOR VERTICAL:

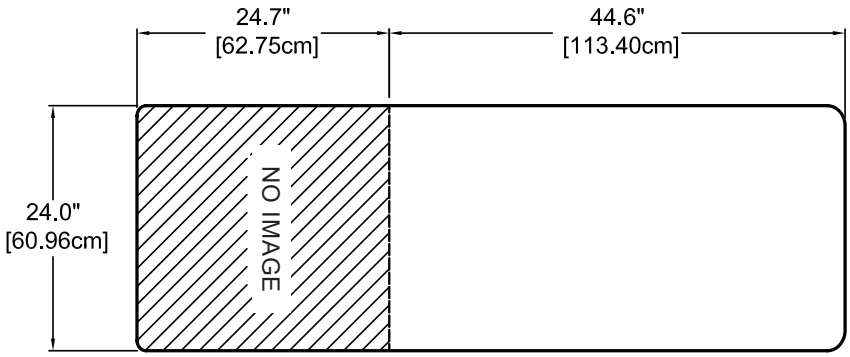

USABLE IMAGING AREA - CFUR301 & CFUR 401

CENTERED FOR A-P VIEW:

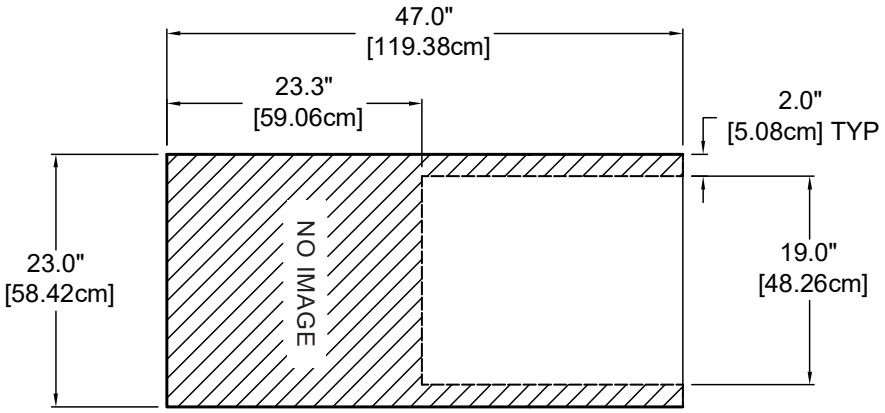

OBLIQUE 30° VIEW FOR VERTICAL:

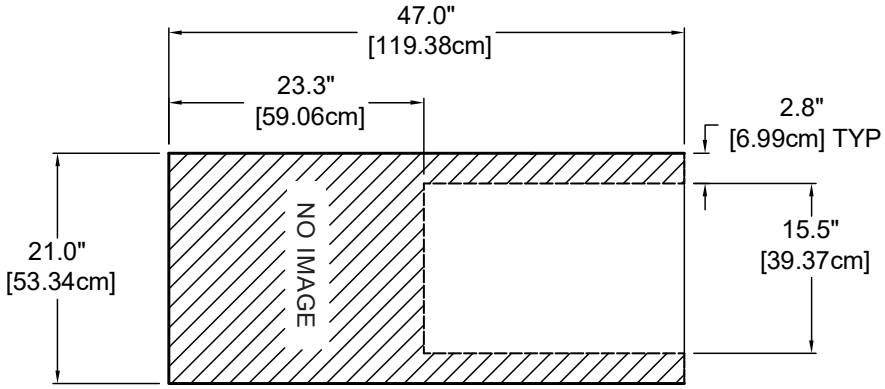

CAUDAL 30° VIEW FOR VERTICAL:

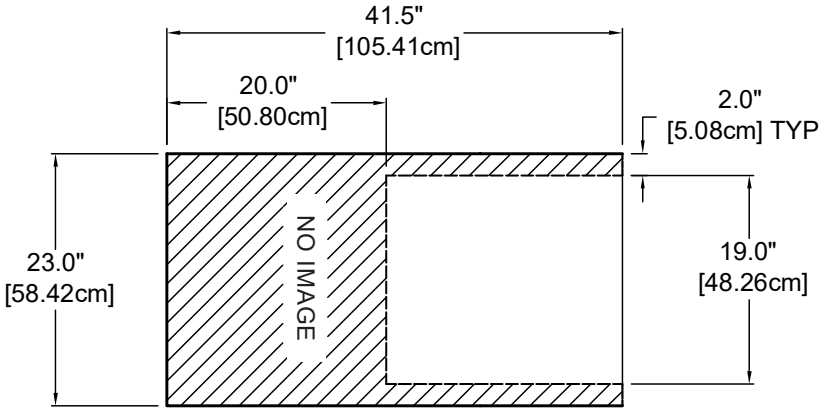

USABLE IMAGING AREA - CFLU401

CENTERED FOR A-P VIEW:

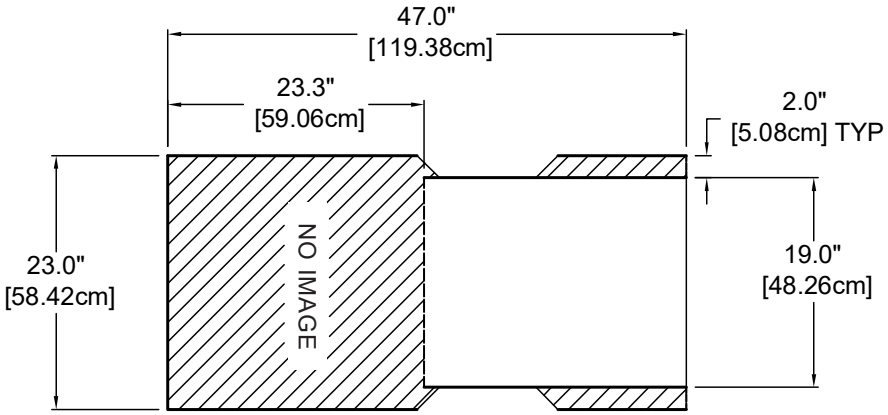

OBLIQUE 30° VIEW FOR VERTICAL:

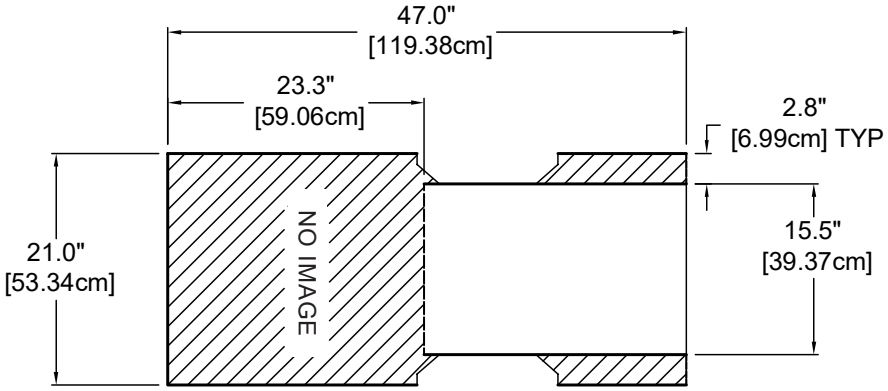

CAUDAL 30° VIEW FOR VERTICAL:

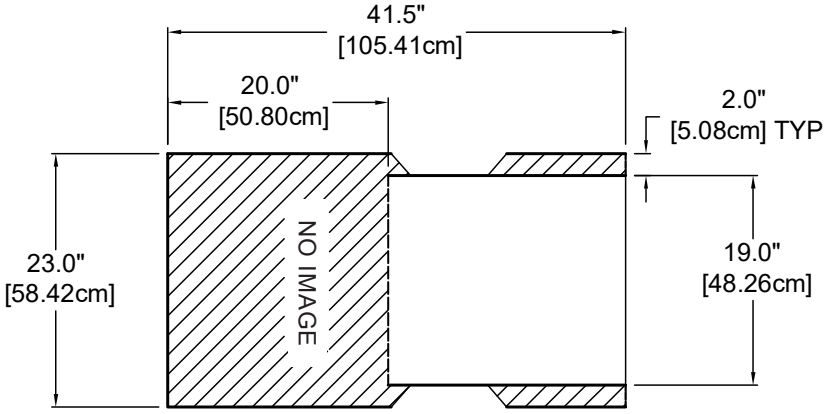

RECOMMENDED CLEANERS/DISINFECTANTS

DANGER To reduce the risk of electric shock:
- Always unplug this furnishing from the electrical outlet before cleaning.

Reference the Recommended Cleaners and Disinfectant list (MMINML0008-EN) that came with the table. This information can also be found at www.oakworksmed.com under product information.

All cleaners and disinfectants have the ability to degrade the upholstery to some extent. However, following the recommended cleaner and disinfectant list and cleaning process will provided the best care for your table and support a long product life.

Oakworks recommends a prepackaged wipe for cleaners/disinfectants to ensure best distribution of disinfectant for the required kill time, without leaving excess residue and/or overexposing components therefore minimizing the potential for damage to materials. Please read and follow disinfectants manufacturers' directions for cleaning and disinfection.

Oakworks does NOT recommend the use of cleaners/disinfectants containing Hydrogen Peroxide, Acetic Acid, or Phenolics. These chemicals can cause damage to the appearance and/or material integrity of various components. Also, while the recommended cleaners/disinfectants list includes products containing Quaternary Ammonium compounds ("quats"), not all products containing quats are approved for use. Some contain additional detergents and/or surfactants which can damage some materials.

Use of non-approved cleaners or disinfectants may lead to damage to upholstery and other materials found on the table and will void the warranty.

CLEANING PROCESS

Follow the cleaners/disinfectant manufacturers' directions for use. Please note that cleaning and disinfecting an Oakworks table is a two part process. First it must be cleaned of any visible soil, then it can be disinfected. Oakworks recommends that the table be positioned in the flat position during the cleaning process. Please follow this procedure for best results:

1. Using an approved cleaner or mild liquid soap and water, clean any visible soil off of the table, working from the top to the bottom of the table. It is recommended that the upholstery be cleaned at least once a week to prevent disinfectant build up.
2. Rinse with clean water and dry with a clean cloth or towel.
3. Using an approved disinfectant, thoroughly disinfectant all surfaces of the tabletop and any high-contact areas such as handles, handsets, etc., making sure they remain wet for the disinfectant manufacturer's recommended contact time. Do not allow disinfectant to pool on the upholstery after the recommended contact time.
4. Wipe off any excess liquid with a cloth or towel and clean water.
5. Dry all surfaces with a clean cloth or towel.

Avoid using writing instruments or other similar instruments around the upholstery as it can cause permanent staining. If this does occur, do not wipe with an alcohol based cleaner. Instead, blot the stain with a clean cloth/ paper towel. Use a recommended cleaner or disinfectant to remove the stain. Follow this with a rinse of clean water.

INSPECTIONS

RECOMMENDED REGULAR INSPECTIONS (monthly or local standard)

- Check for damage to the power, hand control(s) and foot control(s) on all cables.
- Check the hand/foot control for signs of wear or damage (replace if necessary).
- Visually inspect components for obvious damage that could cause problems during operation.

RECOMMENDED PERIODIC INSPECTIONS (yearly or local standard)

- Check for damage to the power, hands control and foot control cables and all visible wiring.
- Check the hand/foot control for signs of wear or damage (replace if necessary).
- Visually inspect components for obvious damage that could cause problems during operation.
- Check all mechanical functions using the hand control. Repeat using the foot control. Check for abnormal noises.
- Check that all fasteners are present and fastened securely.
- Check table grounding.
- Clean unusual buildup of dirt on the table and/or parts of the table not normally cleaned on a regular basis.
- Check for tears or cracks in the upholstery.

WARRANTY

View complete warranty details at www.oakworksmed.com under the information tab “Warranty and Return Policy.”

UNIQUE DEVICE IDENTIFICATION (UDI) INFORMATION

The UDI Label is located under a clear window of the Product Label.

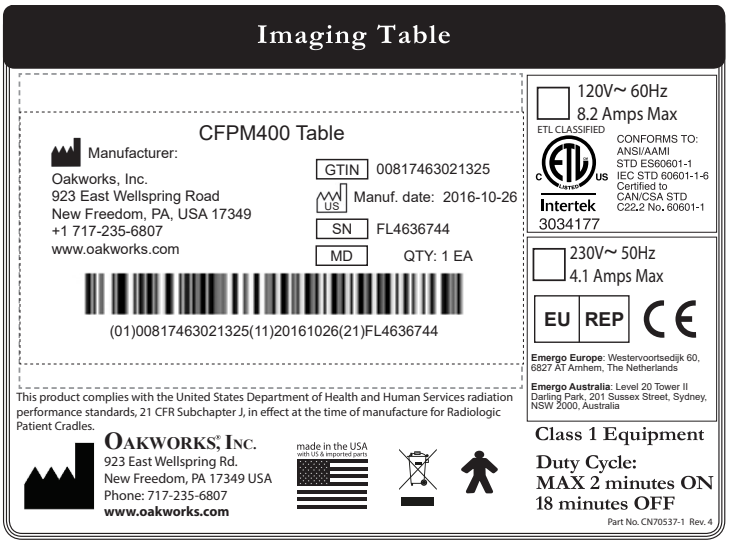

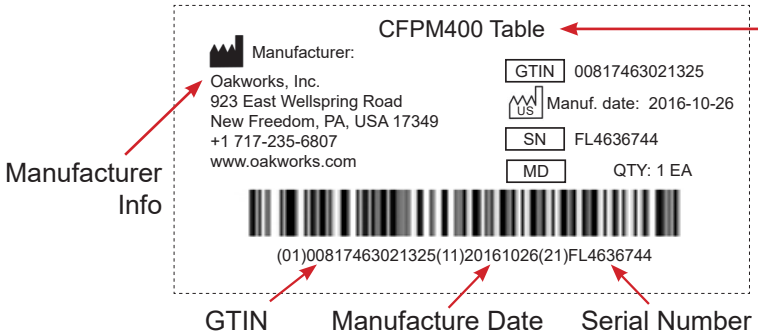

Unique Device Information:

- GTIN - 14 digit number unique for each variation of a model
- Manufacture Date - Country of manufacture and date the device goes into production in YYYY-MM-DD format
- SN - Serial Number
- MD - Medical Device Symbol
- QTY - Quantity of the product

PRODUCT SPECIFICATIONS

	NORTH AMERICA	EUROPE/AUSTRALIA	
Weight	359-452 lbs.	163-205 kg.	
Shipping Weight	452-544 lbs.	205-247 kg.	
Lifting Capacity	500 lbs. (750 lbs. Bariatric)	227 kg. (340 kg. Bariatric)	
Materials of Construction	This product contains no latex.		
Aluminum Filtration Equivalence and thickness of Carbon Fiber Tabletop	ALUMINUM EQUIVALENCE		THICKNESS
	Non-Bariatric Tops	100 kVp, HVL of 3.6mm = 1.10 (1.35 max)	1.65” (4.2 cm)
	Bariatric Tops	100 kVp, HVL of 3.6mm = 1.50 (1.79 max)	2.18” (5.5 cm)
	All Extensions	100 kVp, HVL of 3.6mm = 2.20 (2.30 max)	.5” (1.3 cm)
	1” (2.5 cm.) Table Pad	100 kVp, HVL of 3.6mm = .88 (1.07 max)	1” (2.5 cm)
	2” (5 cm.) Table Pad	100 kVp, HVL of 3.6mm = .88 (1.07 max)	2” (5 cm)
	This product complies with United States Department of Health and Human Services radiation performance standards, 21 CFR Sub chapter J, in effect at the time of manufacture for radiographic tables.		

ENVIRONMENTAL CONDITIONS

Conditions	Temperature	Humidity	Atmospheric Pressure
Normal Use	50° (10°C) to 104° (40°C)	20% to 60% RH	98 to 105 kPa
Storage & Transport	-20° (-29°C) to 135° (57°C)	20% to 95% RH	98 to 105 kPa

ELECTRICAL SPECIFICATIONS

Designed for:	CFPM100 Tables Only		All Other Tables	
	NORTH AMERICA	EUROPE/ AUSTRALIA	NORTH AMERICA	EUROPE/ AUSTRALIA
Input Service (All electric tables)	120 VAC/15 amp/60 Hz	230 VAC/10 amp/50/60 Hz	120 VAC/15 amp/60 Hz	220 VAC/10 amp/50/60 Hz
Current Draw	5.8 amps	3.0 amps	8.2 amps	4.5 amps
Maximum Momentary Current Consumption	9.0 amps	4.5 amps	12.3 amps	6.7 amps
Voltage Output to Actuators	120 VDC	220 VDC	24V table top, 120V column	24V table top, 220V column
Electric Shock Protection	Class 1 Equipment			
Tabletop Applied Part	Type B Applied Part			
Ingress Protection (Rating)	Table (IPX0), Hand Control (IPX6) and Foot Control (IPX8).			
Mode of Operation	Intermittent Operation: MAX 2 minutes ON / 18 minutes OFF			
Recovery Management	The table does not require a reset or initiation process after power loss. Recovery time is less than 1 minute after power is re-applied.			

Guidance and Manufacturer's Declaration - Electromagnetic Emissions All Equipment and Systems		
The table is intended for use in the electromagnetic environment specified below. The customer or the user of the table should assure that it is used in such an environment.		
Emissions Test	Compliance	Electromagnetic environment - guidance
RF emissions CISPR 11	Group 1	The table uses RF energy only for its internal function. Therefore, its RF emissions are very low and are not likely to cause any interference in nearby electronic equipment.
RF emissions CISPR 11	Class A	The table is suitable for use in all establishments other than domestic and those directly connected to the public low-voltage power supply network that supplies buildings used for domestic purposes.
Harmonic emissions IEC 61000-3-2	Class A	
Flicker emissions IEC 61000-3-3	Complies	

Recommended Separation Distances between the portable and mobile RF Communications equipment and the Oakworks Imaging and Pain Management Tables for Equipment and Systems that are NOT life-supporting			
The table is intended for use in the electromagnetic environment in which radiated RF disturbances are controlled. The customer or the user of the table can help prevent electromagnetic interference by maintaining a minimum distance between portable and mobile RF communications equipment (transmitters) and the table as recommended below, according to the maximum output of the communications equipment.			
Rated maximum output power of transmitter W	Separation distance according to frequency of transmitter (m)		
	150 kHz to 80 MHz $d = 1.2 \sqrt{P}$	80 MHz to 800 MHz $d = 1.2 \sqrt{P}$	800 MHz to 2.5 GHz $d = 2.3 \sqrt{P}$
0.01	0.12	0.12	0.23
0.1	0.38	0.38	0.73
1	1.2	1.2	2.3
10	3.8	3.8	7.3
100	12	12	23
For transmitters rated at a maximum output power not listed above, the recommended separation distance d in meters (m) can be estimated using the equation applicable to the frequency of the transmitter, where P is maximum output power rating of the transmitter in watts (W) according to the transmitter manufacturer.			
NOTE 1 At 80 MHz and 800 MHz, the separation distance for the higher frequency range applies.			
NOTE 2 These guidelines may not apply in all situations. Electromagnetic propagation is affected by absorption and reflection from structures, objects and people.			

SIGNIFICANT ZONE OF OCCUPANCY

The significant zones of occupancy and the stray radiation in the imaging equipment zone are shown below according to clause 13.4 and 13.6 in IEC 60601-1-3:2013.

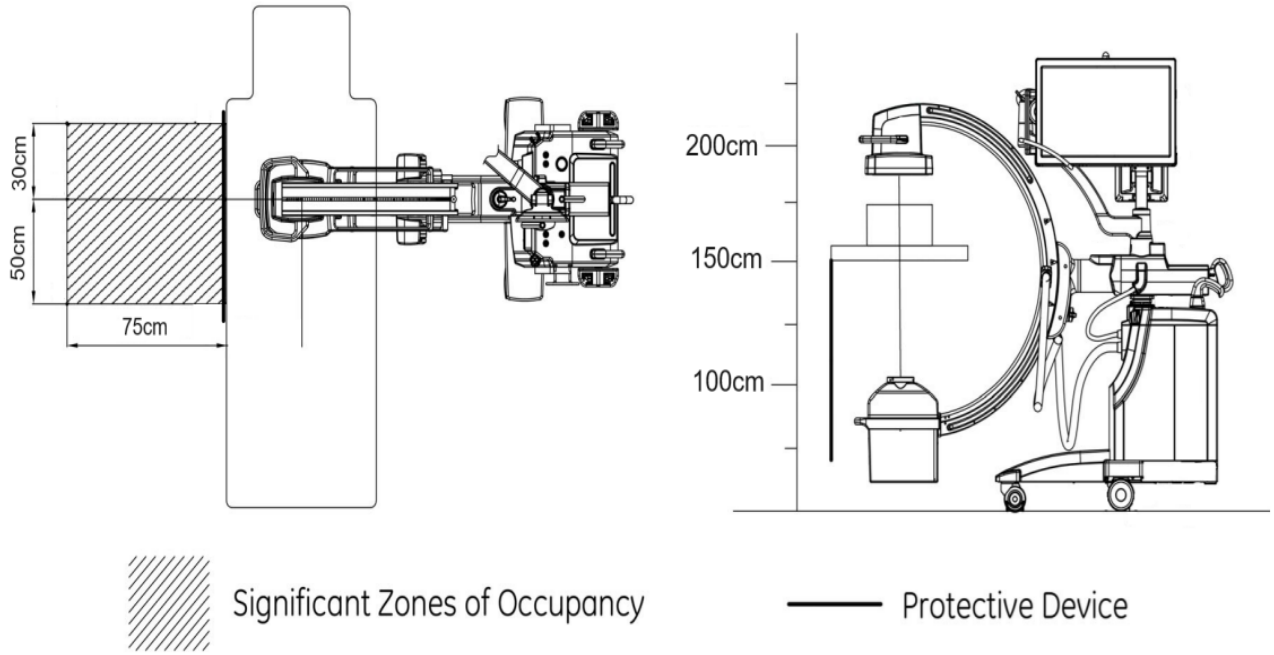

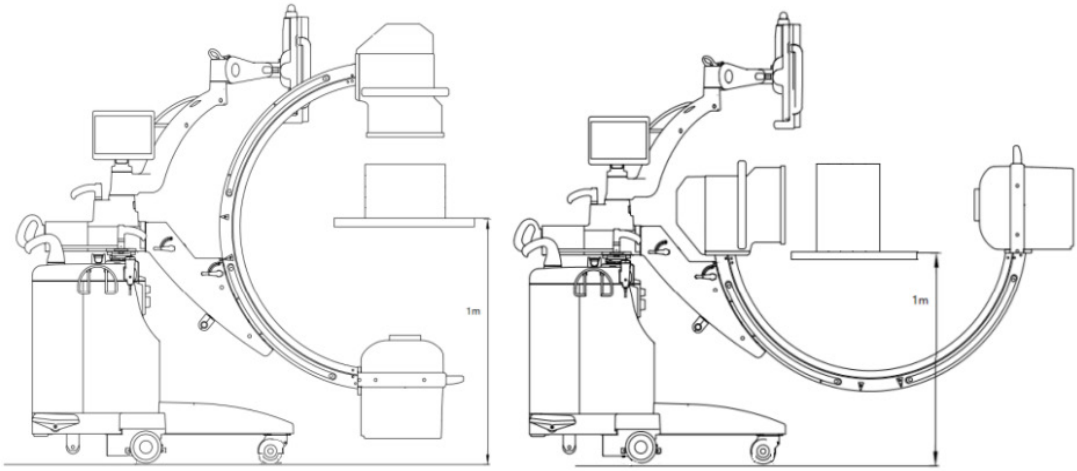

Vertical configuration

Horizontal configuration

SIGNIFICANT ZONE OF OCCUPANCY

ISO Kerma Map test according to clause 203.13.4 in EN 60601-2-43:2010. The measurement is performed at 2 planes at a typical height of 1.5m from the ground when the system on normal mode 110kV, 4mA. The operation table surface is 1.5m height above the floor.

Typical ISO Kerma Maps

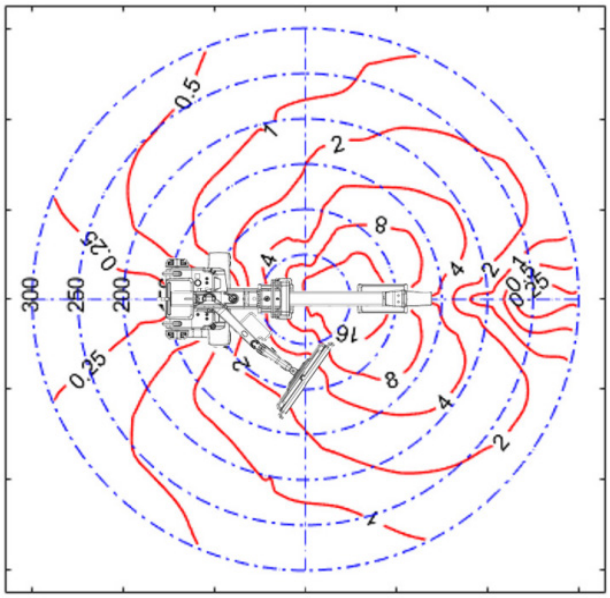

Horizontal configuration, 1.5m

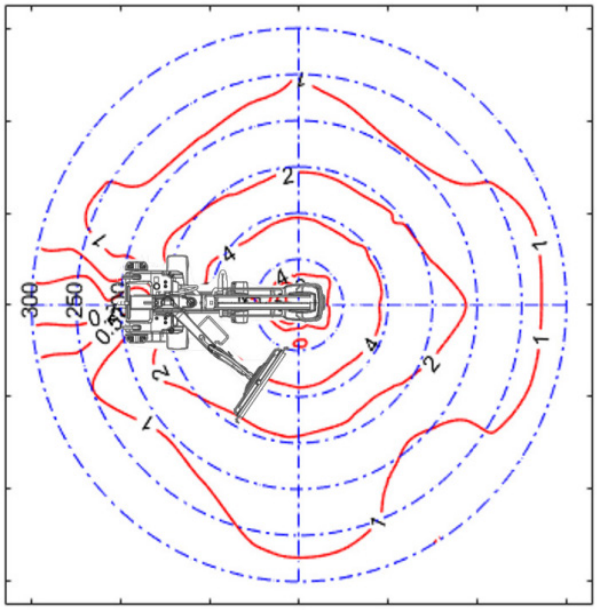

Vertical configuration, 1.5m

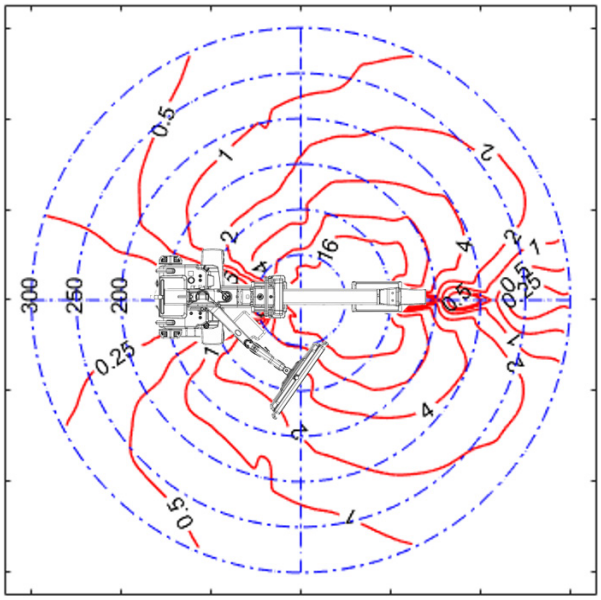

Horizontal configuration, 1m

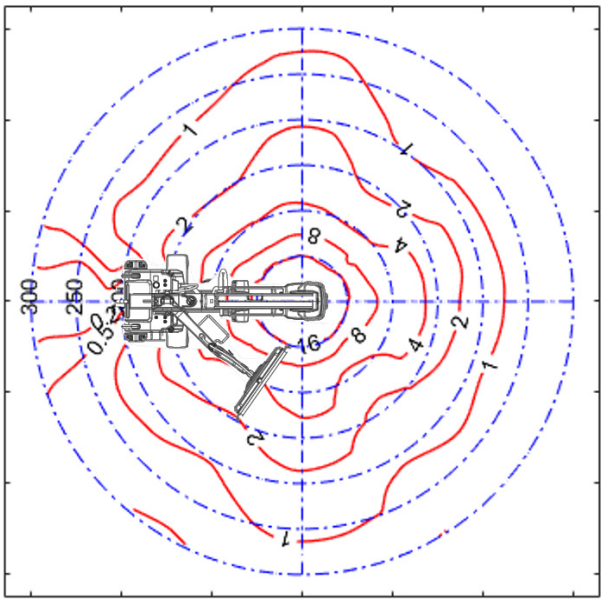

Vertical configuration, 1m

SIGNIFICANT ZONE OF OCCUPANCY

Air Kerma Rate
(in µGy/hr)

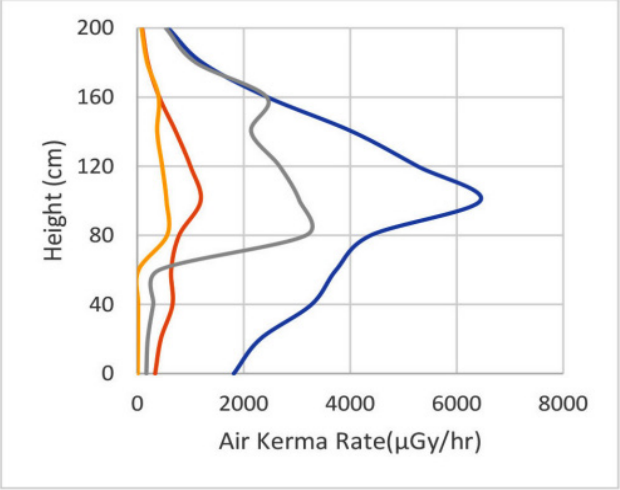

110kV/4mA Without Protective Device
70kV/3mA Without Protective Device
110kV/4mA With Protective Device
70kV/3mA With Protective Device

FOR GASTROINTESTINAL EXAMINATIONS, THE FOLLOWING LIMITS OF AIR KERMA IN ONE HOUR SHALL NOT EXCEED IN THE TABLE BELOW.

AIR KERMA RATE (GASTROINTESTINAL EXAMINATIONS)

Orientation of PATIENT SUPPORT	Region of height related to the REFERENCE POINT of the RADIATION DETECTOR (above floor) in the SIGNIFICANT ZONE OF OCCUPANCY cm	Highest permitted AIR KERMA in one hour mGy
Horizontal or vertical	0 to 40	1.5
Horizontal	40 to 200	0.15
Vertical	40 to 170	0.15

SIGNIFICANT ZONE OF OCCUPANCY

The significant zones of occupancy and the stray radiation in the imaging equipment zone are shown below according to clause 13.4 and 13.6 in IEC 60601-1-3:2013.

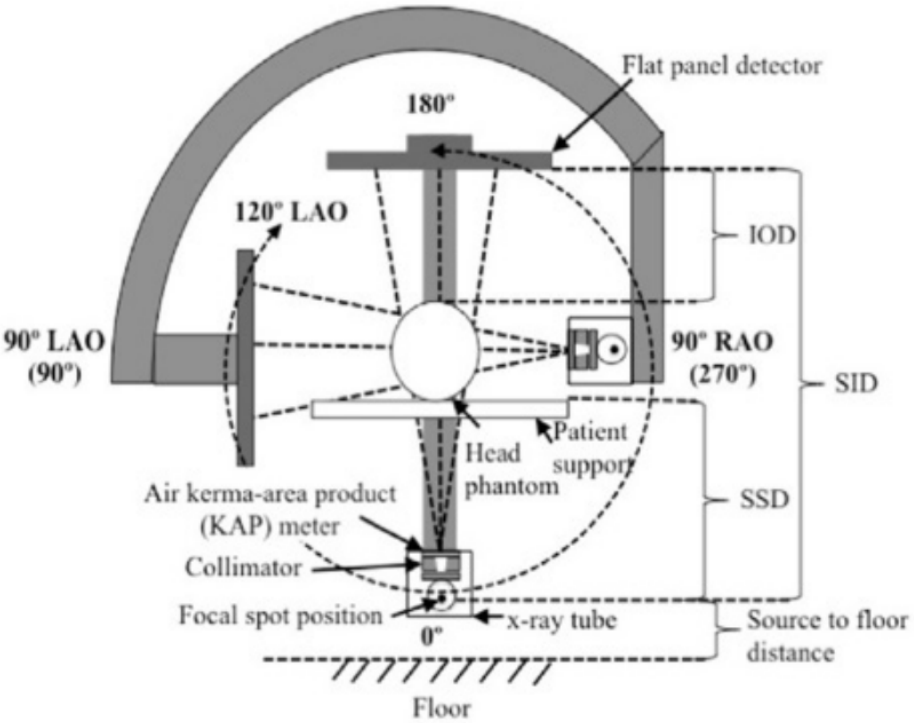

Focal Spot and Beam postions

PRODUCT DISPOSAL

Disposal of the Oakworks Imaging and Pain Management Tables must be compliant with the applicable regulations and requirements of the local state environmental protection agency, state health agency, Centers for Disease Control (CDC), Occupational Safety and Health Administration (OSHA), U.S. Food and Drug Administration (FDA) as well as any other local authorities that apply to this product.

USER MANUAL

OAKWORKS®

Imaging and Pain Management Tables

CONTACT INFORMATION:

OAKWORKS® Inc.

923 East Wellspring Road

New Freedom, PA USA 17349

Phone: 717.235.6807

FAX: 717.235.6798

www.oakworksmed.com

CoYoMe B.V.

Edisonsraat 4

3261 LD Oud-Beijerland, The Netherlands

www.coyome.eu

Enrico Cohen

Enrico@coyome.nl

info@coyome.nl

Phone: +31 613.886.424

CE MD

EU REP Emergo Europe
Westervoortsedijk 60
6827 AT Arnhem
The Netherlands

AU REP Emergo Australia
Level 20 Tower II Darling Park
201 Sussex Street
Sydney, MSW 2000 Australia

C ETL LISTED US
Intertek
3034177

CONFORMS TO:
ANSI/AAMI STD ES60601-1
IEC STD 60601-1 3RD EDITION
IEC STD 60601-1-2 4TH EDITION
IEC STD 60601-1-6 3RD EDITION
IEC STD 60601-2-32
CERTIFIED TO CAN/CSA STD C22.2 NO. 60601-1
CB TEST CERTIFICATE AND REPORT

FCC Rules and Regulations, Title 47, Part 15, Subpart B, Class A. Unintentional Radiators.

NOTE: This equipment has been tested and found to comply with the limits for a Class A digital device, pursuant to part 15 of the FCC Rules. These limits are designed to provide reasonable protection against harmful interference when the equipment is operated in a commercial environment. This equipment generates, uses, and can radiate radio frequency energy and, if not installed and used in accordance with the instruction manual, may cause harmful interference to radio communications. Operation of this equipment in a residential area is likely to cause harmful interference in which case the user will be required to correct the interference at his own expense.

Notice: Any serious incident that has occurred in relation to the device should be reported to Oakworks® Inc. and to the competent authority of the Member State in which the user and/or patient is established.

Original Instructions
Manual Part Number MMMNST0008-EN / Med-RA-PM-71
Revision Level: 23
Revision Date: 09/09/2026

English, Printed in USA

made in the USA with US & imported parts

OAKWORKS® MEDICAL PRODUCTS