USER MANUAL

OAKWORKS®
DTPM 300 Imaging Table

www.oakworksmed.com · 717.235.6807

made in the USA
with US & imported parts

OAKWORKS®
MEDICAL PRODUCTS

© Copyright 2026
OAKWORKS® , Inc.

Notice

The information contained within this document is subject to change without notice and should not be construed as a commitment by OAKWORKS®, Inc.

OAKWORKS®, Inc. encourages requests for technical specifications and the like documentation to ensure accuracy. The appropriate documentation is available upon request.

OAKWORKS®, Inc. shall not be liable for incidental or consequential damages in connection with or arising out of the furnishing, performance, or use of this document and the program material which it describes.

Printed in U.S.A.

All rights are reserved. No part of this document may be photocopied, reproduced or translated to another language without prior written consent of OAKWORKS®, Inc.

OAKWORKS® is a registered trademark of OAKWORKS®, Inc.

TABLE OF CONTENTS

Product Use Description 1
- Contraindications 1

Important Safety Instructions
- Symbol Identification 1
- Safety Instructions 2-3

Product Description & Photo
- DTPM300 - Polycarbonate Top 4

Installation
- Grounding 5

Directions for Use
- Foot Control Operations 6
- Hand Control Operations 7
- Manual Longitudinal Travel Operation 8
- Patient Restraint Strap 8
- Top Pad Removal 9
- Emergency Stop Use 9
- Carbon Fiber Arm Board 10
- Fluoro Extender 10
- Spine Positioning System II 11
- Locking Casters Use 11

Reference
- Usable Imaging Area Diagrams 12-13

Cleaning & Disinfection
- Recommended Cleaners/Disinfectants 14
- Cleaning Process 14

Inspections & Maintenance 15

Warranty Information 15

Model Number & Serial Number 16

Specifications
- Product Specifications 17
- Environmental Conditions 17
- Electrical Specifications 17
- Guidance and manufacturer's declaration - Electromagnetic emissions 18
- Recommended separation distances 18
- Guidance and manufacturer's declaration - Electromagnetic immunity 19-20
- Significant Zones of Occupancy 21-24
- Product Disposal 24

Contact Information ..... back cover

PRODUCT USE DESCRIPTION

The Oakworks® Fluoroscopy table with Trendelenburg feature is a radiographic table intended for use with mobile or compact stationary C-arm Fluoroscopy Systems where the x-ray generator is located below the table top. It is ideally suited for pain management imaging and therapeutic procedures. It is suitable to use for diagnostic x-ray imaging and imaging during therapeutic procedures such as spinal injections, vertebroplasty procedures and other pain management procedures.

It is intended to be operated by a healthcare professional in a medical environment. No special training is required but a review of the following Safety Instructions is important for the safety of the operator and patient. The healthcare professional should read and understand this entire manual before use with a patient.

CONTRAINDICATIONS

- The Oakworks® Fluoroscopy Table should not be used with Fluoroscopy systems having intensifier screens or film cassettes larger than 12 inches (30 cm) when an oblique angle of view is being used.
- The table is not designed for and should not be used with Magnetic Resonance Imaging procedures.
- Although the table accommodates a number of procedures, it is not intended to serve as a surgical procedure table.

SYMBOL IDENTIFICATION

This symbol, when used in this manual and on product labels, represents a caution warning. Be sure to read and comply with all precautions and warnings.

This symbol, when used in this manual and on product labels, warns against an electrical shock hazard. Be sure to observe and comply with all warnings.

This symbol, when used in this manual and on product labels, indicates the potential of exposure to harmful x-rays. Be sure to read and comply with all warnings.

This symbol, when used in this manual and on product labels, indicates that the table and components are a Type B Applied Part pursuant to IEC 60601-1.

This symbol, when used in this manual or on product labels, indicates a Protective Earth (Ground) Terminal.

This symbol, when used in this manual and on product labels, indicates the name and address of the manufacturer.

This symbol, when used in this manual or on product labels, indicates the country of manufacture along with date of manufacture of the device next to it.

This symbol, when used in this manual or on product labels, indicates alternating current (AC).

This symbol, when used in this manual or on product labels, indicates direct current (DC).

This symbol is used to indicate that the operator should consult the user manual.

IMPORTANT SAFETY INSTRUCTIONS

CAUTION READ AND SAVE THESE INSTRUCTIONS

Improper use of this device can cause injury. Be sure to read all operating instructions prior to use.

Duty Cycle: Max. 10% or 2 min. continuous use at full load then 18 min. without use.

Use caution when changing the table position to avoid collision with other moving or stationary items.

The Foot control must remain on the floor. Damage to the table will result if the foot control is placed under the column.

Medical Electrical Equipment needs special precautions regarding EMC and needs to be installed and put into service according to the EMC information provided in this manual.

Portable and mobile RF communications equipment can affect Medical Electrical Equipment.

The use of accessories, transducers, and cables other than those specified by the manufacturer, may result in increased Emissions or decreased Immunity of the table.

The table should not be used adjacent to or stacked with other equipment. If adjacent or stacked use is necessary, the Table should be observed to verify normal operation in the configuration in which it will be used.

The Imaging Table is designed to be a standalone table used with radiographic equipment. This table must not be modified or incorporated into any other equipment.

Weight limit (patient and accessories): 450 lbs. / 205 kg.

A pinch hazard exists under the side rail on either side of the table. The tabletop slides in a head to toe direction on a roller track system. Be sure to keep fingers and arms away from the table's slide mechanism.

The table top slide mechanism must be locked at all times except when the top is being moved. Both locking knobs must be securely tightened at all times - Travel can occur if the locking knobs are not secured by inadvertently pushing on the end of the table or by tilting the table.

The table utilizes four locking casters to permit movement of the table within the imaging suite. Accidental movement of the table may occur. Lock at least two casters prior to accomplishing imaging of the patient.

When lowering the table or using the Trendelenburg functions, make sure there is nothing underneath the table top that can impede motion (like stools, cabinets, accessory parts, cleaners, etc.)

Be certain that the table is completely lowered without any tilt being present prior to discharging an ambulatory patient. The patient may lose balance and fall.

The table is not to be used as a gurney or to move patients from room to room.

This table is not suitable for use in the presence of flammable anesthetic mixture with air or oxygen or nitrous oxide.

After unpacking your table, inspect it thoroughly for damage. If you suspect a problem, do not use the table and call our customer service department at 717.235.6807.

Store the hand control when not in use on the Hand Rail attached to the back of the tabletop.

The table is not intended for CPR (Cardiopulmonary Resuscitation) use.

Abnormal table functions will be visible by the operator such as two functions/movements operating at the same time. This is an indication the table is not operating properly due to a fault (short/open) in the control components.

Oakworks accessories should only be used with Oakworks products. The use of non-Oakworks accessories such as Armboard and pads could expose the patient to excess radiation exposure.

Do not use the controls inside the SIGNIFICANT ZONE OF OCCUPANCY.

WARNING

Grounding reliability can only be achieved when this equipment is connected to an equivalent 3 prong receptacle marked “Hospital Only” or “Hospital Grade”. See the Grounding section of this manual.

Patient must be secured with a Safety Restraint Strap prior to using the table.

Electrical Shock Hazard - The power supply/control module is located on the base of the table. No user serviceable parts are inside the control box. Refer servicing to qualified personnel. Unplug wall connector prior to contact with any cables connected to the power supply.

To reduce the risk of burns, fire, electric shock or injury to persons:

1. Unplug this furnishing from the electrical outlet before cleaning.
2. Unplug from outlet before adding or removing parts.
3. Never operate this furnishing if it has a damaged cord or plug, if it is not working properly, if it has been dropped or damaged, or dropped into water. Contact Oakworks Customer Service before use.
4. Keep the cord away from heated surfaces.
5. Never drop or insert any object into any opening.
6. Do not use outdoors.
7. Do not operate where aerosol (spray) products are being used or where oxygen is being administered.

DANGER

The potential of exposure to harmful x-rays exists when this table is in use. The use of adequate x-ray barrier devices is necessary to provide protection to both the operator and the patient. X-ray barrier devices are recommended for the patient outside of the intended target area to prevent exposure to scattered radiation from the x-ray generating source.

- OAKWORKS® Imaging Tables may be used for x-ray imaging where the x-ray generator is located below the tabletop and the image receptor is located above the tabletop. This is the recommended method. The tables may also be used for x-ray imaging where the x-ray generator is located above the tabletop and the image receptor is located below the tabletop. This application will result in greater patient exposure to x-rays. The operator must weigh this issue with the imaging requirements and patient exposure issues.
- The Imaging Tables may be used with the x-ray generator above the tabletop and a film cassette located on the tabletop. (See contraindications regarding film cassette size.)
- The x-ray generator should never be located above the tabletop when the OAKWORKS® Imaging Table and the OAKWORKS® Spine Positioning System/Prone Pillow are used together. This type of use requires that the x-ray generator is located below the tabletop and the imaging intensifier or film cassette located above the tabletop.
- Do not use the controls inside the SIGNIFICANT ZONE OF OCCUPANCY.

WARNING

This medical device is MR Unsafe and should remain outside the MRI scanner room.

DTPM300
Polycarbonate Top

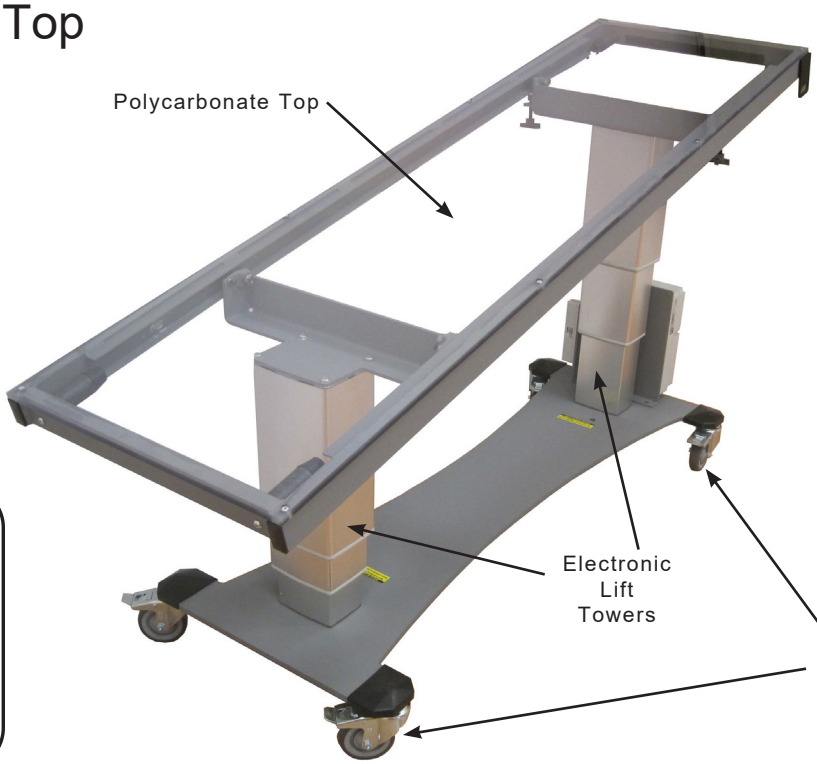

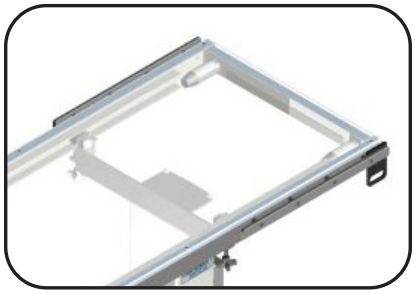

Optional T-Rails

STANDARD SPECIFICATIONS	
Motion 1 w/o pad	Powered 24”-40” (61-101 cm.) Height Range
Motion 2	Powered ±14° Trendelenburg/ Reverse Trendelenburg
Motion 3	Manual 23” (58 cm.) Overall Longitudinal travel
Table Controls	(1) Foot Control & (1) Hand Control
Table Voltage Options	120V/60Hz or 230V/50Hz
Table Capacity	450 lbs. (205 kg.) (patient and accessories)
Polycarbonate Top	78” (198 cm.) Long x 24” (61 cm.) Wide
4” (10 cm.) Locking Casters	Locking / Unlocking Casters for mobile or permanent positioning
Patient Restraint Strap	Must be used during all procedures
Padding	2” (5 cm) Comfort Foam™
Table Weight	390 lbs. (177 kg.)

OPTIONS
5” (12.5 cm.) Locking Casters
6”, 20”, 78” (15.3 cm, 50.8 cm, 198.1 cm) or custom T-Rails Lengths
1” (2.5cm) Tabletop Pad
ACCESSORIES
Carbon Fiber Arm Board (Standard or Wide)
Spine Positioning System II
Fluoro Extender

For electrical specs, see Specifications section.

INSTALLATION

The Imaging tables come completely assembled and ready to use. Plug the cord into a functioning outlet that is rated for the table. (See Grounding below)

Arrange the power cord and control cords so that they will not create a tripping hazard and where the controls are located to your liking and are conveniently accessible.

Be sure access to plug is not blocked for disconnecting the table from power.

If a power outage does occur and the facility is running on emergency power, the supplied power must meet the input requirements listed in the Electrical Specification section.

GROUNDING

DANGER Risk of Electric Shock - Connect this furnishing to a properly grounded outlet only.

This product must be grounded. If it should malfunction or break down, grounding provides a path of least resistance for electrical current to reduce the risk of electric shock. This product is equipped with a cord having an equipment-grounding conductor and a grounding pin. The pin must be plugged into an appropriate outlet that is properly installed and grounded in accordance with all local codes and ordinances. See U.S. sample below.

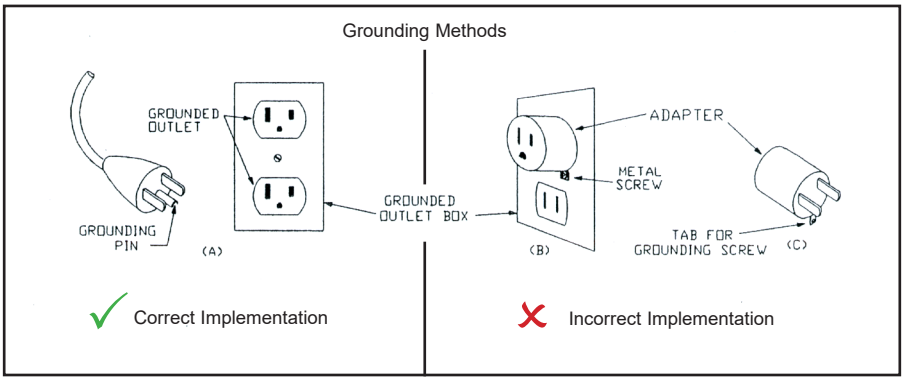

Improper connection of the equipment-grounding conductor can result in a risk of electric shock. Check with a qualified electrician or service person if you are in doubt as to whether the product is properly grounded. Do not modify the plug provided with the product - if it will not fit the outlet; have a proper outlet installed by a qualified electrician.

DIRECTIONS FOR USE

The Oakworks® Fluoroscopy Table with Trendelenburg positioning offers a variety of positioning capabilities for diagnostic x-ray imaging and imaging during therapeutic procedures.

DANGER

Should the use of this device create a circumstance under which the patient could be overexposed to ionizing radiation, discontinue use immediately and determine an alternative radiology table or alternative x-ray generating source to use.

FOOT CONTROL OPERATIONS

CAUTION The Foot control must remain on the floor. Damage to the table will result if the foot control or other objects are placed under the column. When operating the table's controls, be sure to observe all cautions and warnings.

All Oakworks® Fluoroscopy Tables come complete with one foot control to control height and a hand control to operate the height and trendelenburg functions of the table.

Operate the Foot control as shown below to raise or lower the height of the table. To increase or decrease the angle of tilt up to a maximum of 14º on either side, see the Hand Control Operations on the next page.

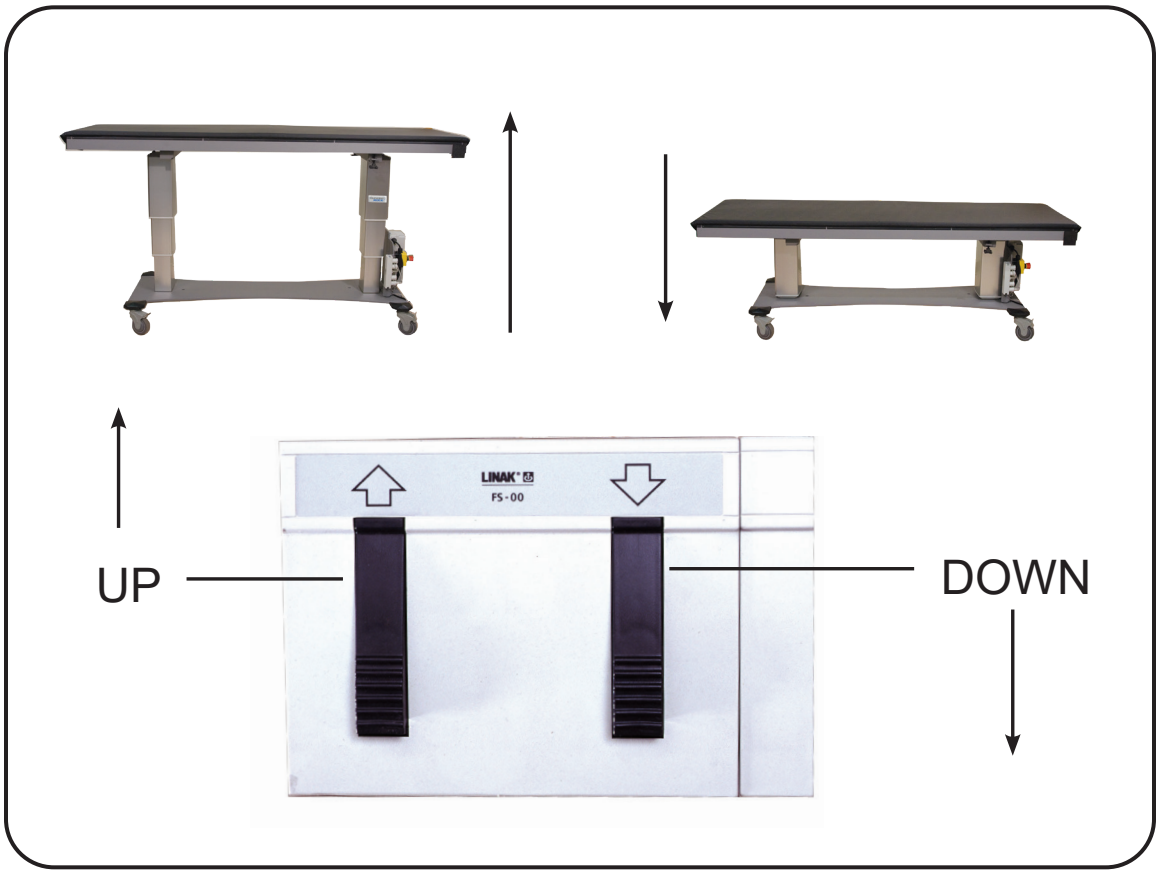

HAND CONTROL OPERATIONS

CAUTION When lowering the chair or using the Trendelenburg functions, make sure there is nothing that can impede motion (like stools, cabinets, accessory parts, cleaners, etc.) When operating the table's controls, be sure to observe all cautions and warnings. Store the hand control when not in use on the Hand Rail attached to the back of the tabletop.

Reverse Trendelenburg:

- activates tilt up to 14º
- positioning stops when table is level; press again for complete reverse.

Trendelenburg:

- activates tilt up to 14º
- positioning stops when table is level; press again for complete reverse.

Height Up:

- Elevates table top
- Trendelenburg / Reverse Trendelenburg positioning are preserved during elevation

Height Down:

- Lowers table top
- Trendelenburg / Reverse Trendelenburg positioning are preserved during lowering

MANUAL LONGITUDINAL TRAVEL OPERATION

CAUTION When operating the table's locking knob be sure to avoid pinching. Keep your fingers and other materials clear from the pinch point. Both locking knobs must be securely tightened at all times - Travel can occur if the locking knobs are not secured by inadvertently pushing on the end of the table or by tilting the table.

The table is designed to allow travel in either the left or the right direction as shown. This feature should only be used when the table is level.

Left - Right Travel ± 11.5" (29 cm.)

LOCKING KNOB OPERATION

A Locking Knob is provided on each side of the table just under the side rail.

Rotate the locking knob several turns counter-clockwise to loosen. Slide the table in the desired direction. Rotate the locking knob clockwise until tight to secure the table against traveling.

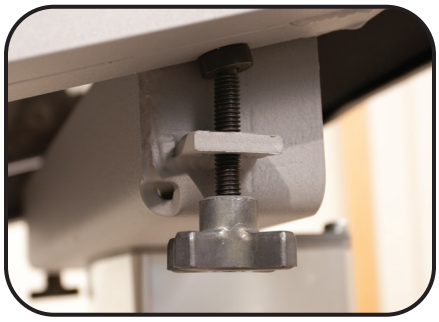

PATIENT RESTRAINT STRAP

CAUTION The Patient Restraint Strap must be used during all procedures to prevent the patient from falling off the table.

The strap has Hook and Loop Faster attached to the ends. The Strap is attached as follows:

1. Place the center of each strap around the patient at two places. Relocate the straps as necessary for adequate clearance.

2. Take the ends of each strap down around the tabletop. Pull each strap snug underneath the table and press the two ends together.

3. Check both straps to assure adequate patient restraint prior to using the Trendelenburg functions.

TOP PAD REMOVAL

Remove the Top Pad by pulling the flaps at the underside of the table on either end until the Hook and Loop Faster detaches. Replace the pad by first centering on the table and then pressing the flaps in place, anchoring the flaps to the Fastener Hook and Loop Faster as shown. (Applies to both the 1” (2.5 cm.) & 2” (5 cm.) pads)

Underside of Tabletop

EMERGENCY STOP

All electric tables are equipped with an emergency stop switch.

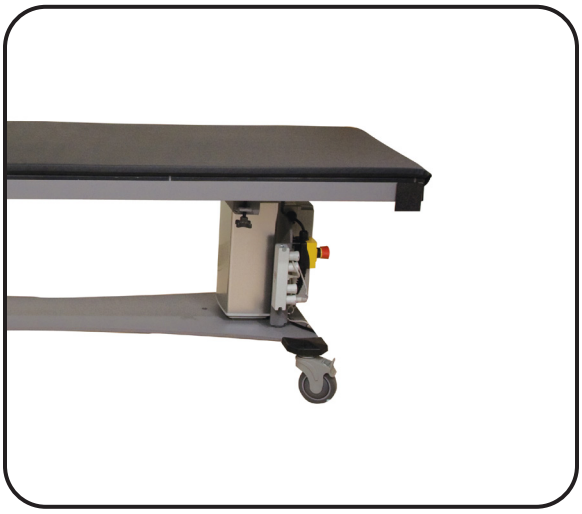

To stop the operation, push the red button.

To reset, rotate the red button clockwise.

If necessary, you can also remove the plug from the outlet. Be sure access is not blocked for disconnecting the table from power.

CARBON FIBER ARM BOARD (ACCESSORY)

CAUTION Do not place undue weight or downward pressure on the Carbon Fiber Arm Board. It is a positioning device for the arms and should not be used as leverage to get on or off the table. Injury can occur. DO NOT exceed 30 lbs. (13.6 kg.) of load on the Support Section. Injury can occur.

USE

This radiolucent device can be used with any flat support surface where ionizing radiation (x-ray) is utilized for imaging. It can be used to support arms and feet.

DIRECTIONS

Unfold the Arm Board and slide the Base Section under the patient and the table pad. Position the patient and the Support Section to suit the needs of the procedure. The weight of the patient will hold the Arm Board in place.

Rotate the Support Section to the desired position. This section rotates up to 180º.

Prone Position at 135º

Supine Position at 180º

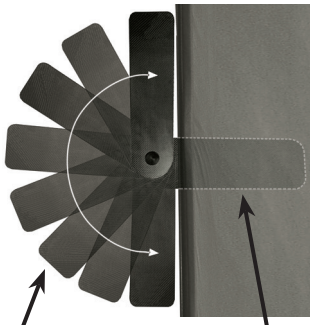

To remove the Arm Board, ask the patient to move their limb off the Support Section and lift their body slightly. This will allow you to pull out the base section of the Arm Board.

Fold the Base and Support sections for storage.

FLUORO EXTENDER (ACCESSORY)

CAUTION Do not place undue weight or downward pressure on the Fluoro Extender. It is a positioning device for the arms and should not be used as leverage to get on or off the table. Injury can occur.

The Oakworks® Fluoro Extender is radiolucent and offers extra width only where you need it for greater positioning accuracy with optimum imaging. The Fluoro Extender is inserted under the table top pad.

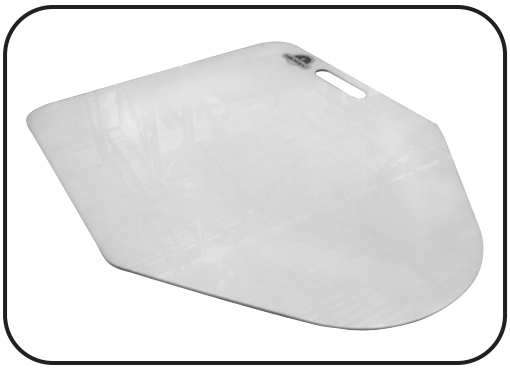

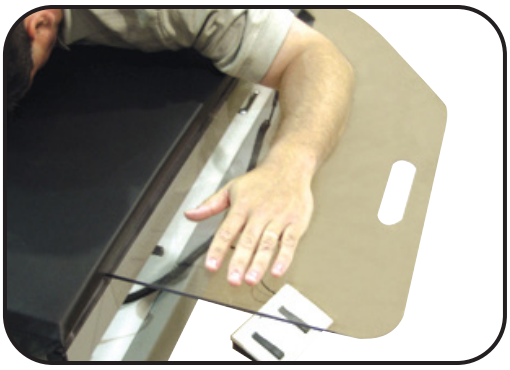

SPINE POSITIONING SYSTEM II (ACCESSORY)

For directions on the use of the Spine Positioning System, see publication “Spine Positioning System” Part number MMMMNUP0003

LOCKING CASTERS USE

All four casters should be locked at all times during use with a patient.

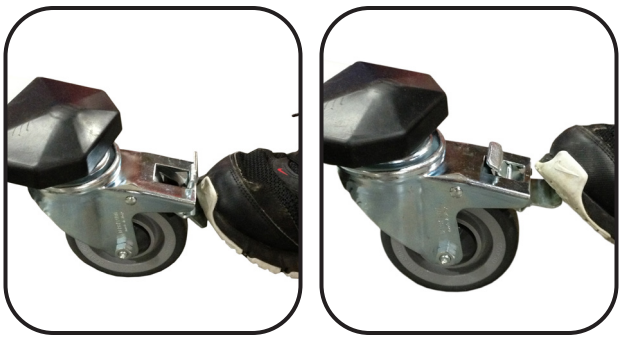

LOCKING THE CASTERS

1. Place your shoe on the end of the casters locking tab.
2. Press firmly downward until you hear a clicking noise and the caster is locked.

UN-LOCKING THE CASTERS

1. Place your shoe on top of the casters locking tab.
2. Press firmly inward and downward until you hear a clicking noise and the caster is unlocked.

USABLE IMAGING AREA

CENTERED FOR A-P VIEW:

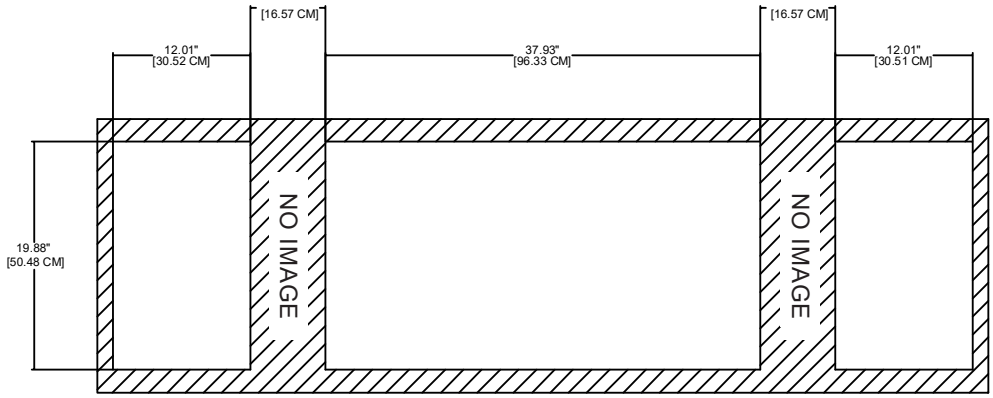

CENTERED OBLIQUE 30º VIEW FROM VERTICAL

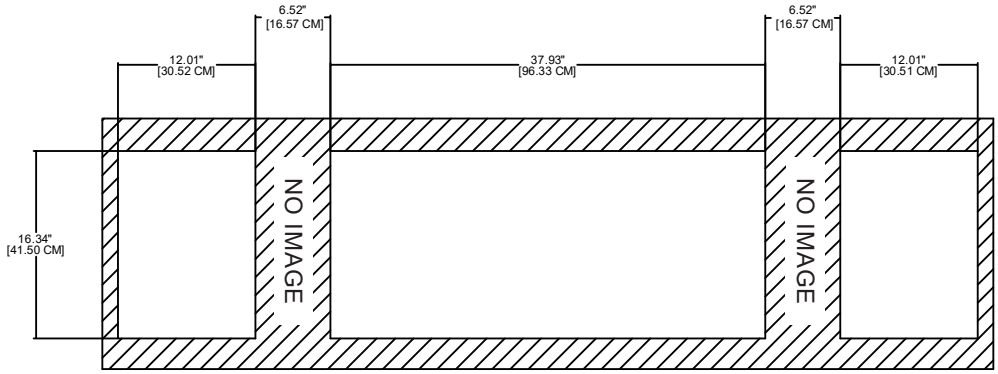

CENTERED CAUDAL 30º VIEW FROM VERTICAL

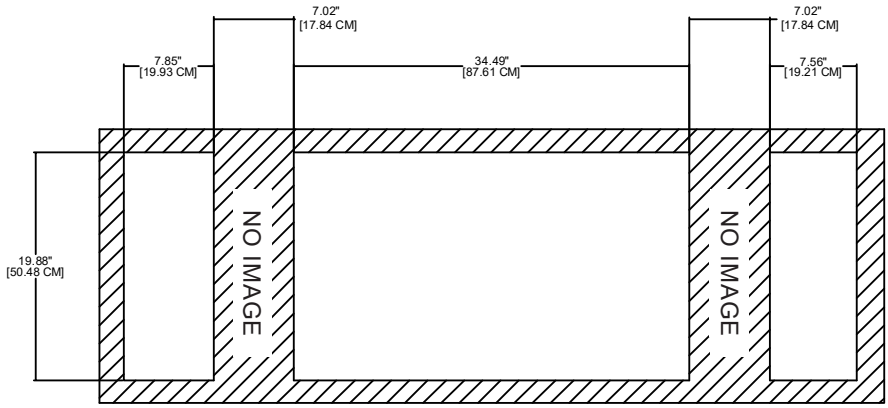

OFFSET FOR A-P VIEW:

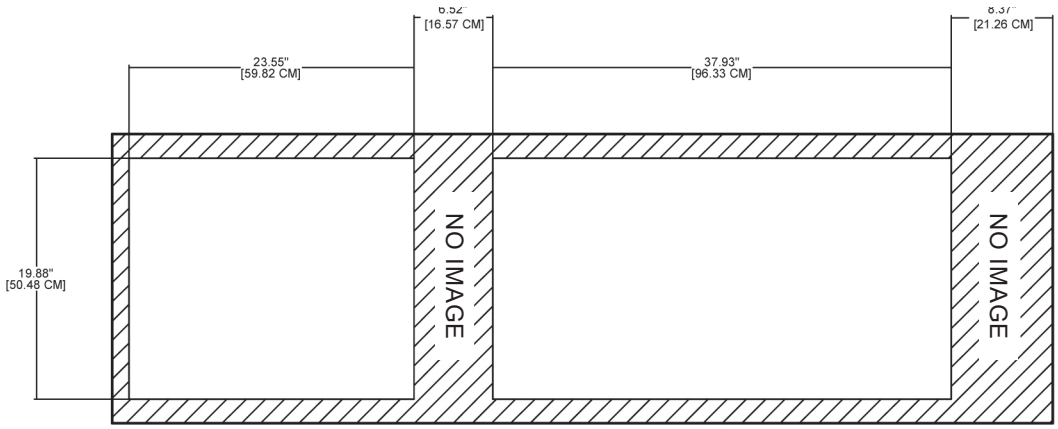

OFFSET CAUDAL 30º VIEW FROM VERTICAL

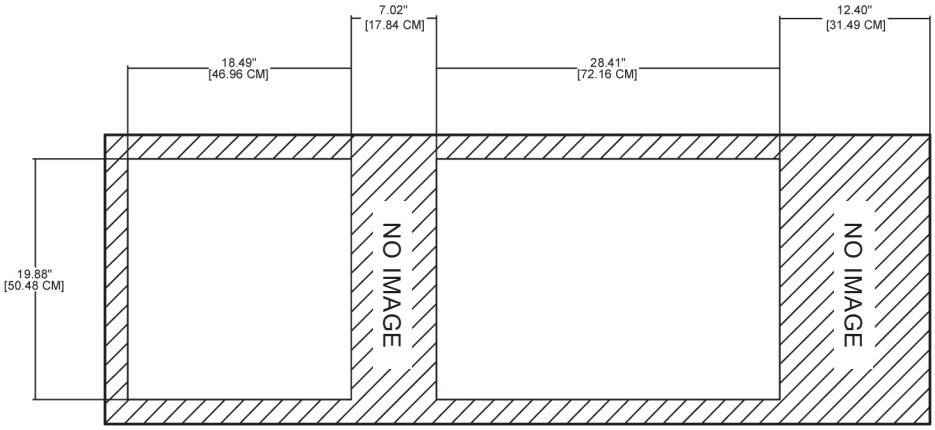

RECOMMENDED CLEANERS/DISINFECTANTS

DANGER To reduce the risk of electric shock:
- Always unplug this furnishing from the electrical outlet before cleaning.

Reference the Recommended Cleaners and Disinfectant list (MMINML0008-EN) that came with the table. This information can also be found at www.oakworksmed.com under product information.

All cleaners and disinfectants have the ability to degrade the upholstery to some extent. However, following the recommended cleaner and disinfectant list and cleaning process will provided the best care for your table and support a long product life.

OAKWORKS® recommends a prepackaged wipe for cleaners/disinfectants to ensure best distribution of disinfectant for the required kill time, without leaving excess residue and/or overexposing components therefore minimizing the potential for damage to materials. Please read and follow disinfectants manufacturers' directions for cleaning and disinfection.

OAKWORKS® does NOT recommend the use of cleaners/disinfectants containing Hydrogen Peroxide, Acetic Acid, or Phenolics. These chemicals can cause damage to the appearance and/or material integrity of various components. Also, while the recommended cleaners/disinfectants list includes products containing Quaternary Ammonium compounds ("quats"), not all products containing quats are approved for use. Some contain additional detergents and/or surfactants which can damage some materials.

Use of non-approved cleaners or disinfectants may lead to damage to upholstery and other materials found on the table and will void the warranty.

CLEANING PROCESS

Follow the cleaners/disinfectant manufacturers' directions for use. Please note that cleaning and disinfecting an OAKWORKS® table is a two part process. First it must be cleaned of any visible soil, then it can be disinfected. OAKWORKS® recommends that the table be positioned in the flat position during the cleaning process. Please follow this procedure for best results:

1. Using an approved cleaner or mild liquid soap and water, clean any visible soil off of the table, working from the top to the bottom of the table. It is recommended that the upholstery be cleaned at least once a week to prevent disinfectant build up.
2. Rinse with clean water and dry with a clean cloth or towel.
3. Using an approved disinfectant, thoroughly disinfectant all surfaces of the tabletop and any high-contact areas such as handles, handsets, etc., making sure they remain wet for the disinfectant manufacturer's recommended contact time. Do not allow disinfectant to pool on the upholstery after the recommended contact time.
4. Wipe off any excess liquid with a cloth or towel and clean water.
5. Dry all surfaces with a clean cloth or towel.

Avoid using writing instruments or other similar instruments around the upholstery as it can cause permanent staining. If this does occur, do not wipe with an alcohol based cleaner. Instead, blot the stain with a clean cloth/ paper towel. Use a recommended cleaner or disinfectant to remove the stain. Follow this with a rinse of clean water.

INSPECTIONS

RECOMMENDED REGULAR INSPECTIONS (monthly or local standard)

- Check for damage to the power, hand control(s) and foot control(s) on all cables.
- Visually inspect components for obvious damage that could cause problems during operation.

RECOMMENDED PERIODIC INSPECTIONS (yearly or local standard)

- Check for damage to the power, hands control and foot control cables and all visible wiring.
- Visually inspect components for obvious damage that could cause problems during operation.
- Check all mechanical functions using the hand control. Repeat using the foot control. Check for abnormal noises.
- Check that all fasteners are present and fastened securely.
- Check table grounding.
- Clean unusual buildup of dirt on the table and/or parts of the table not normally cleaned on a regular basis.
- Check for tears or cracks in the upholstery.

WARRANTY

View complete warranty details at www.oakworks.com

MODEL & SERIAL NUMBERS

The model number and serial number are located on the frame of the top.

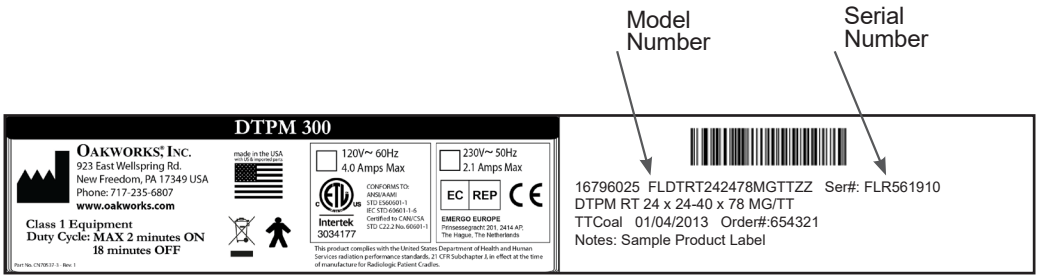

Model Numbers and Serial Numbers always start with a letter.

PRODUCT SPECIFICATIONS	
Materials of Construction	This product contains no latex.
Top Frame	Extruded aluminum with powder coated or anodized surfaces.
Table Top	.5” (1.3 cm.) Polycarbonate
Patient Comfort	2” (5 cm.) Upholstered foam pad
Table Length	78” (198 cm.)
Table Width	24” (61 cm.)
Height Range	24”-40” (61-102 cm.) Standard
Table Top Travel Range	±11.5” (29 cm)
Trendelenburg Tilt	±14°
Weight	390 lbs. (177 kg.)
Lifting Capacity	450 lbs. (205 kg.)
Aluminum Filtration Equivalent of Table top	TABLE TOP 100 kvp, Hvl of 3.6 mm = 1.62 (1.74 max)
	1” (2.5 cm.) TABLE TOP PAD 100 kvp, Hvl of 3.6 mm = .88 (1.07 max)
	2” (5 cm.) TABLE TOP PAD 100 kvp, Hvl of 3.6 mm = 1.47 (1.76 max)

This product complies with the United States Department of Health and Human Services radiation performance standards, 21 CFR Subchapter I, in effect at the time of manufacture for radiographic tables.

ENVIRONMENTAL CONDITIONS			
Conditions	Temperature	Humidity	Atmospheric Pressure
Normal Use	50° (10°C) to 104° (40°C)	20% to 60% RH	98 to 105 kPa
Storage & Transport	-20° (-29°C) to 135° (57°C)	20% to 95% RH	98 to 105 kPa

ELECTRICAL SPECIFICATIONS		
Designed for:	North America	Europe
Input Service	120 VAC/15 amp/60 Hz	220 VAC/10 amp/50/60 Hz
Current Draw	5.8 amps	2.9 amps
Maximum Momentary Current Consumption	6.0 amps	3.0 amps
Voltage Output to Actuators	24 VDC	24 VDC
Electric Shock Protection	Class 1 Equipment	Class 1 Equipment
Tabletop Applied Part	Type B Applied Part	Type B Applied Part
Ingress Protection Rating	Table (IPX0), Foot Control (IPX6), Hand Control (IPX8)	Table (IPX0), Foot Control (IPX6), Hand Control (IPX8)

Guidance and Manufacturer's Declaration - Electromagnetic Emissions		
The table is intended for use in the electromagnetic environment specified below. The customer or the user of the table should assure that it is used in such an environment.		
Emissions Test	Compliance	Electromagnetic environment - guidance
RF emissions CISPR 11	Group 1	The table uses RF energy only for its internal function. Therefore, its RF emissions are very low and are not likely to cause any interference in nearby electronic equipment.
RF emissions CISPR 11	Class A	The table is suitable for use in all establishments other than domestic and those directly connected to the public low-voltage power supply network that supplies buildings used for domestic purposes.
Harmonic emissions IEC 61000-3-2	Class A	
Flicker emissions IEC 61000-3-3	Complies	

Recommended Separation Distances between the portable and mobile RF Communications equipment and the table			
The table is intended for use in the electromagnetic environment in which radiated RF disturbances are controlled. The customer or the user of the table can help prevent electromagnetic interference by maintaining a minimum distance between portable and mobile RF communications equipment (transmitters) and the table as recommended below, according to the maximum output of the communications equipment.			
Rated maximum output power of transmitter W	Separation distance according to frequency of transmitter (m)		
	150 kHz to 80 MHz $d = 1.2 \sqrt{P}$	80 MHz to 800 MHz $d = 1.2 \sqrt{P}$	800 MHz to 2.5 GHz $d = 2.3 \sqrt{P}$
0.01	0.12	0.12	0.23
0.1	0.38	0.38	0.73
1	1.2	1.2	2.3
10	3.8	3.8	7.3
100	12	12	38
For transmitters rated at a maximum output power not listed above, the recommended separation distance d in meters (m) can be estimated using the equation applicable to the frequency of the transmitter, where P is maximum output power rating of the transmitter in watts (W) according to the transmitter manufacturer.			
NOTE 1 At 80 MHz and 800 MHz, the separation distance for the higher frequency range applies.			
NOTE 2 These guidelines may not apply in all situations. Electromagnetic propagation is affected by absorption and reflection from structures, objects and people.			

Guidance and manufacturer's declaration - electromagnetic immunity			
The table is intended for use in the electromagnetic environment specified below. The customer or the user of the table should assure that it is used in such an environment.			
Immunity Test	IEC 60601 test level	Compliance level	Electromagnetic environment - guidance
Electrostatic discharge (ESD) IEC 61000-4-2	±6 kV contact ±8 kV air	±6 kV contact ±8 kV air	Floors should be wood, concrete or ceramic tile. If floors are covered with synthetic material, the relative humidity should be at least 30 %.
Electrical fast transient/burst IEC 61000-4-4	±2 kV for power supply lines ±1 kV for input/output lines	±2 kV for power supply lines Not applicable	Mains power quality should be that of a typical commercial or hospital environment.
Surge IEC 61000-4-5	±1 kV line(s) to line(s) ±2 kV line(s) to earth	±1 kV line(s) to line(s) ±2 kV line(s) to earth	Mains power quality should be that of a typical commercial or hospital environment.
Voltage dips, short interruptions and voltage variations on power supply input lines IEC 61000-4-11	<5 % UT (>95 % dip in UT) for 0,5 cycle 40 % UT (60 % dip in UT) for 5 cycles 70 % UT (30 % dip in UT) for 25 cycles <5 % UT (>95 % dip in UT) for 5 sec	<5 % UT (>95 % dip in UT) for 0,5 cycle 40 % UT (60 % dip in UT) for 5 cycles 70 % UT (30 % dip in UT) for 25 cycles <5 % UT (>95 % dip in UT) for 5 sec	Mains power quality should be that of a typical commercial or hospital environment. If the user of the table requires continued operation during power mains interruptions, it is recommended that the table be powered from an uninterruptible power supply or a battery.
Power frequency (50/60 Hz) magnetic field IEC 61000-4-8	3 A / m	3 A / m	Power frequency magnetic fields should be at levels characteristic of a typical location in a typical commercial or hospital environment.
NOTE U_T is the a.c. mains voltage prior to application of the test level.			

Guidance and manufacturer's declaration - electromagnetic immunity			
The table is intended for use in the electromagnetic environment specified below. The customer or the user of the table should assure that it is used in such an environment.			
Immunity Test	IEC 60601 test level	Compliance level	Electromagnetic environment - guidance
Conducted RF IEC 61000-4-6 Radiated RF IEC 61000-4-3	3 Vrms 150 kHz to 80 MHz 3 V/m 80 MHz to 2,5 GHz	3Vrms 3V/m	Portable and mobile RF communications equipment should be used no closer to any part of the table, including cables, than the recommended separation distance calculated from the equation applicable to the frequency of the transmitter. Recommended separation distance $d = 1.2 \sqrt{P}$ $d = 1.2 \sqrt{P}$ 80 MHz to 800 MHz $d = 2.3 \sqrt{P}$ 800 MHz to 2,5 GHz Where P is the maximum output power rating of the transmitter in watts (W) according to the transmitter manufacturer and d is the recommended separation distance in meters (m). Field strengths from fixed RF transmitters, as deter-mined by an electromagnetic site survey, [a]should be less than the compliance level in each frequency range. [b] Interference may occur in the vicinity of equipment marked with the following symbol:
NOTE 1 At 80 MHz and 800 MHz, the higher frequency range applies. NOTE 2 These guidelines may not apply in all situations. Electromagnetic propagation is affected by absorption and reflection from structures, objects and people.			
[a] Field strengths from fixed transmitters, such as base stations for radio (cellular/cordless) telephones and land mobile radios, amateur radio, AM and FM radio broadcast and TV broadcast cannot be predicted theoretically with accuracy. To assess the electromagnetic environment due to fixed RF transmitters, an electromagnetic site survey should be considered. If the measured field strength in the location in which the table is used exceeds the applicable RF compliance level above, the table should be observed to verify normal operation. If abnormal performance is observed, additional measures may be necessary, such as re-orienting or relocating the table [b] Over the frequency range 150 kHz to 80 MHz, field strengths should be less than 3 V/m.			

SIGNIFICANT ZONE OF OCCUPANCY

The significant zones of occupancy and the stray radiation in the imaging equipment zone are shown below according to clause 13.4 and 13.6 in IEC 60601-1-3:2013.

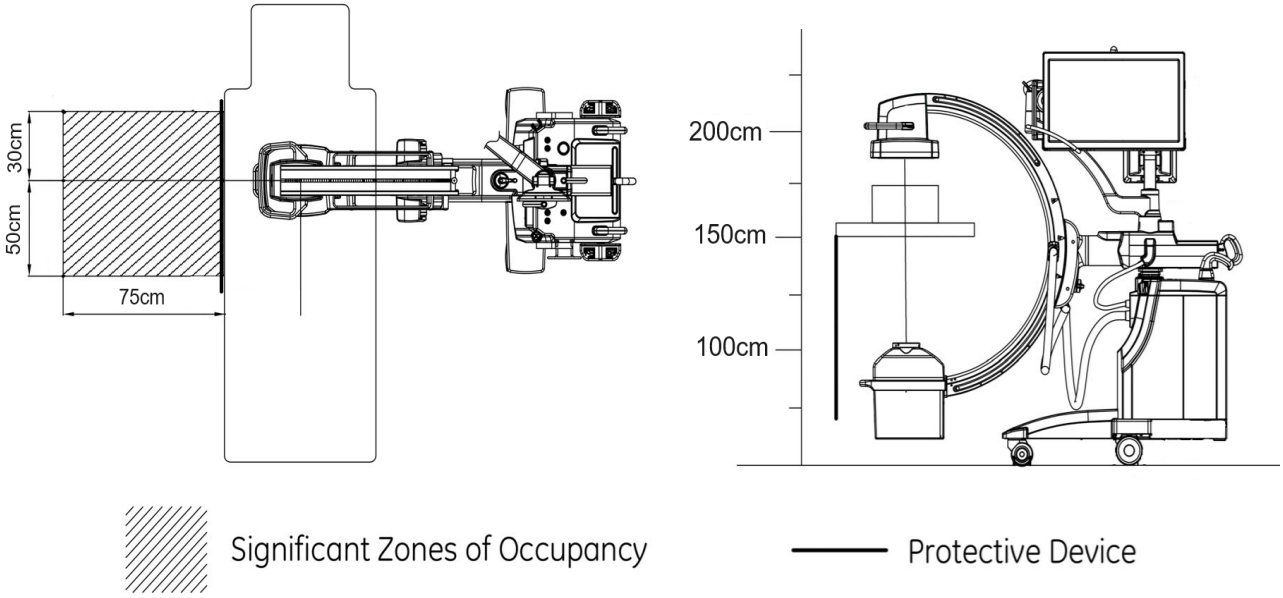

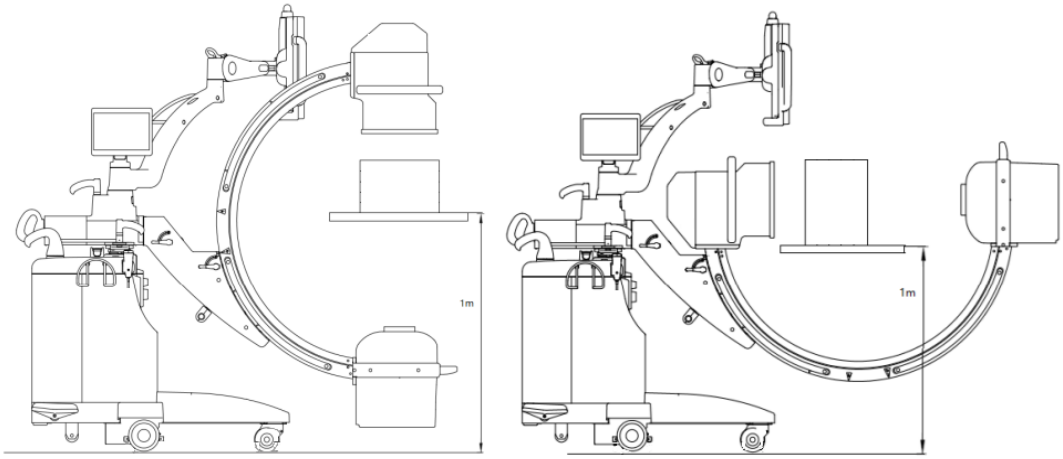

Vertical configuration

Horizontal configuration

SIGNIFICANT ZONE OF OCCUPANCY

ISO Kerma Map test according to clause 203.13.4 in EN 60601-2-43:2010. The measurement is performed at 2 planes at a typical height of 1.5m from the ground when the system on normal mode 110kV, 4mA. The operation table surface is 1.5m height above the floor.

Typical ISO Kerma Maps

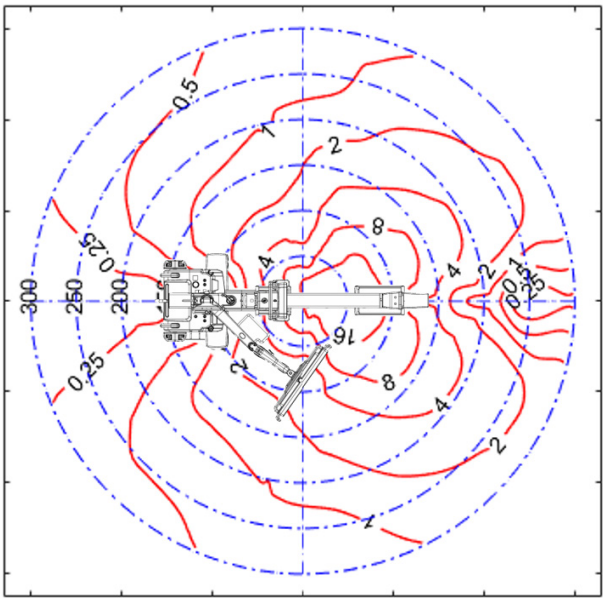

Horizontal configuration, 1.5m

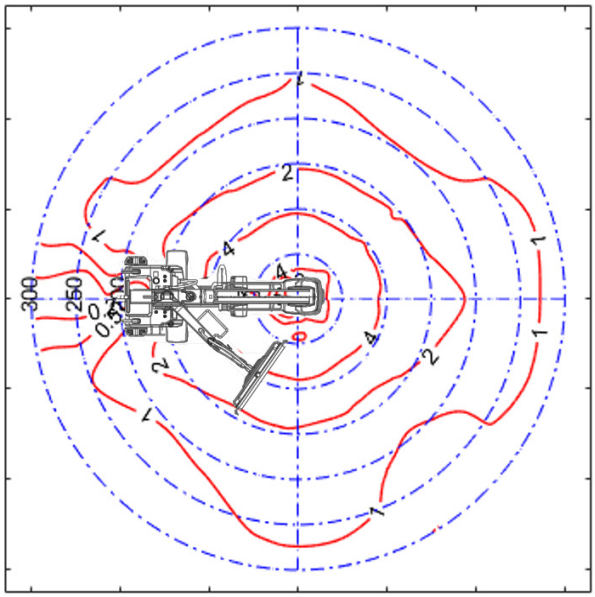

Vertical configuration, 1.5m

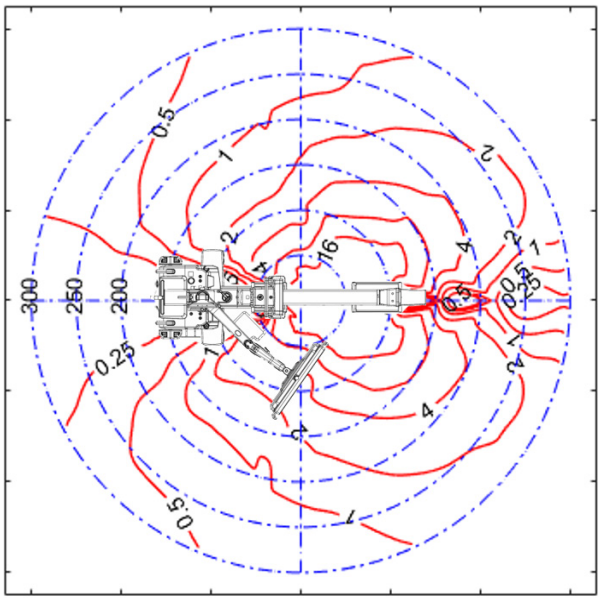

Horizontal configuration, 1m

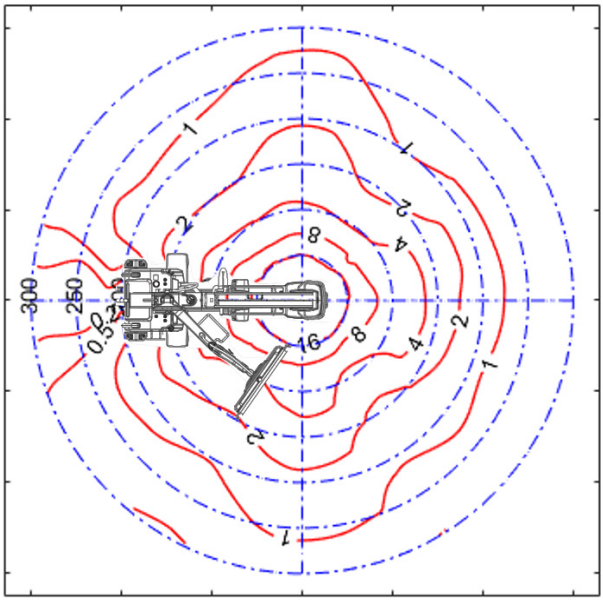

Vertical configuration, 1m

SIGNIFICANT ZONE OF OCCUPANCY

Air Kerma Rate
(in µGy/hr)

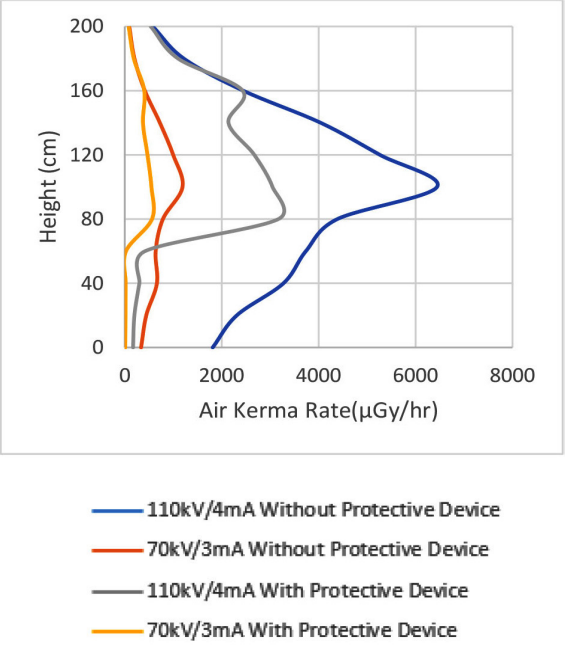

FOR GASTROINTESTINAL EXAMINATIONS, THE FOLLOWING LIMITS OF AIR KERMA IN ONE HOUR SHALL NOT EXCEED IN THE TABLE BELOW.

AIR KERMA RATE (GASTROINTESTINAL EXAMINATIONS)

Orientation of PATIENT SUPPORT	Region of height related to the REFERENCE POINT of the RADIATION DETECTOR (above floor) in the SIGNIFICANT ZONE OF OCCUPANCY cm	Highest permitted AIR KERMA in one hour mGy
Horizontal or vertical	0 to 40	1.5
Horizontal	40 to 200	0.15
Vertical	40 to 170	0.15

SIGNIFICANT ZONE OF OCCUPANCY

The significant zones of occupancy and the stray radiation in the imaging equipment zone are shown below according to clause 13.4 and 13.6 in IEC 60601-1-3:2013.

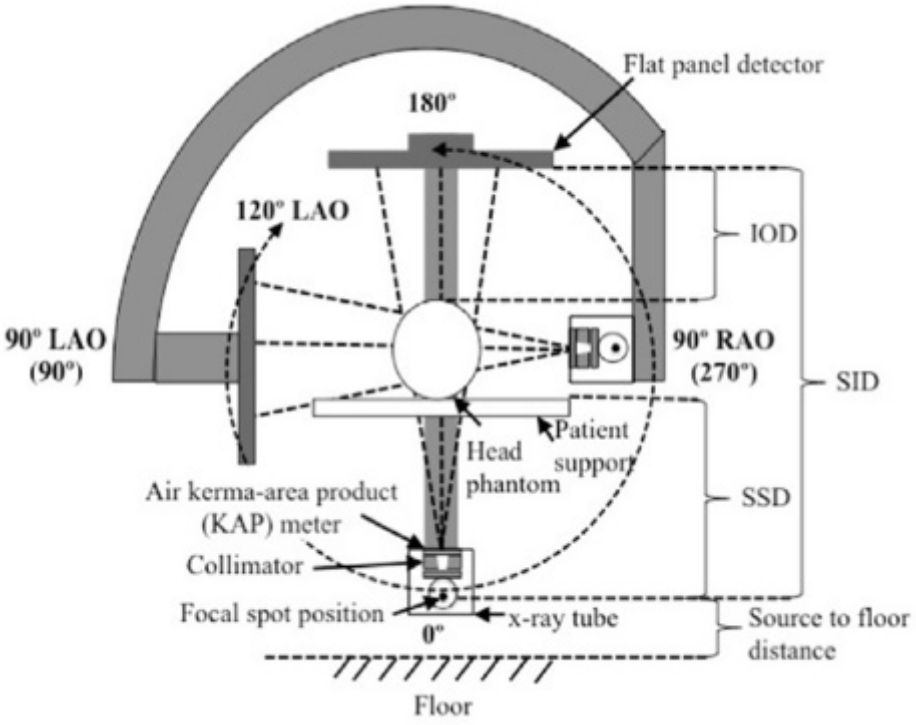

Focal Spot and Beam postions

PRODUCT DISPOSAL

Disposal of the Oakworks Imaging and Pain Management Tables must be compliant with the applicable regulations and requirements of the local state environmental protection agency, state health agency, Centers for Disease Control (CDC), Occupational Safety and Health Administration (OSHA), U.S. Food and Drug Administration (FDA) as well as any other local authorities that apply to this product.

USER MANUAL

OAKWORKS®
DTPM300 Imaging Table

CONTACT INFORMATION:

OAKWORKS® Inc.
923 East Wellspring Road
New Freedom, PA USA 17349
Phone: 717.235.6807
FAX: 717.235.6798
www.oakworksmed.com

CoYoMe B.V.
Edisonsraat 4
3261 LD Oud-Beijerland, The Netherlands
www.coyome.eu
Enrico Cohen
Enrico@coyome.nl
info@coyome.nl
Phone: +31 613.886.424

EU REP
Emergo Europe
Westervoortsedijk 60
6827 AT Arnhem
The Netherlands

CE MD

Intertek
3034177

CONFORMS TO:
ANSI/AAMI STD ES60601-1
IEC STD 60601-1 3RD EDITION
IEC STD 60601-1-2 3RD EDITION
IEC STD 60601-1-6 3RD EDITION
IEC STD 60601-2-32
CERTIFIED TO CAN/CSA STD C22.2 NO. 60601-1
CB TEST CERTIFICATE AND REPORT

Notice: Any serious incident that has occurred in relation to the device should be reported to Oakworks® Inc. and to the competent authority of the Member State in which the user and/or patient is established.

Manual Part Number MMMNST0017-EN / Med-RA-PM-78
Revision: 11
Revision Date: 09/02/2026

made in the USA
with US & imported parts

OAKWORKS® MEDICAL PRODUCTS

English, Printed in USA